Brüel & Kjær

Technical Review

Teletechnical, Acoustical, and Vibrational Research

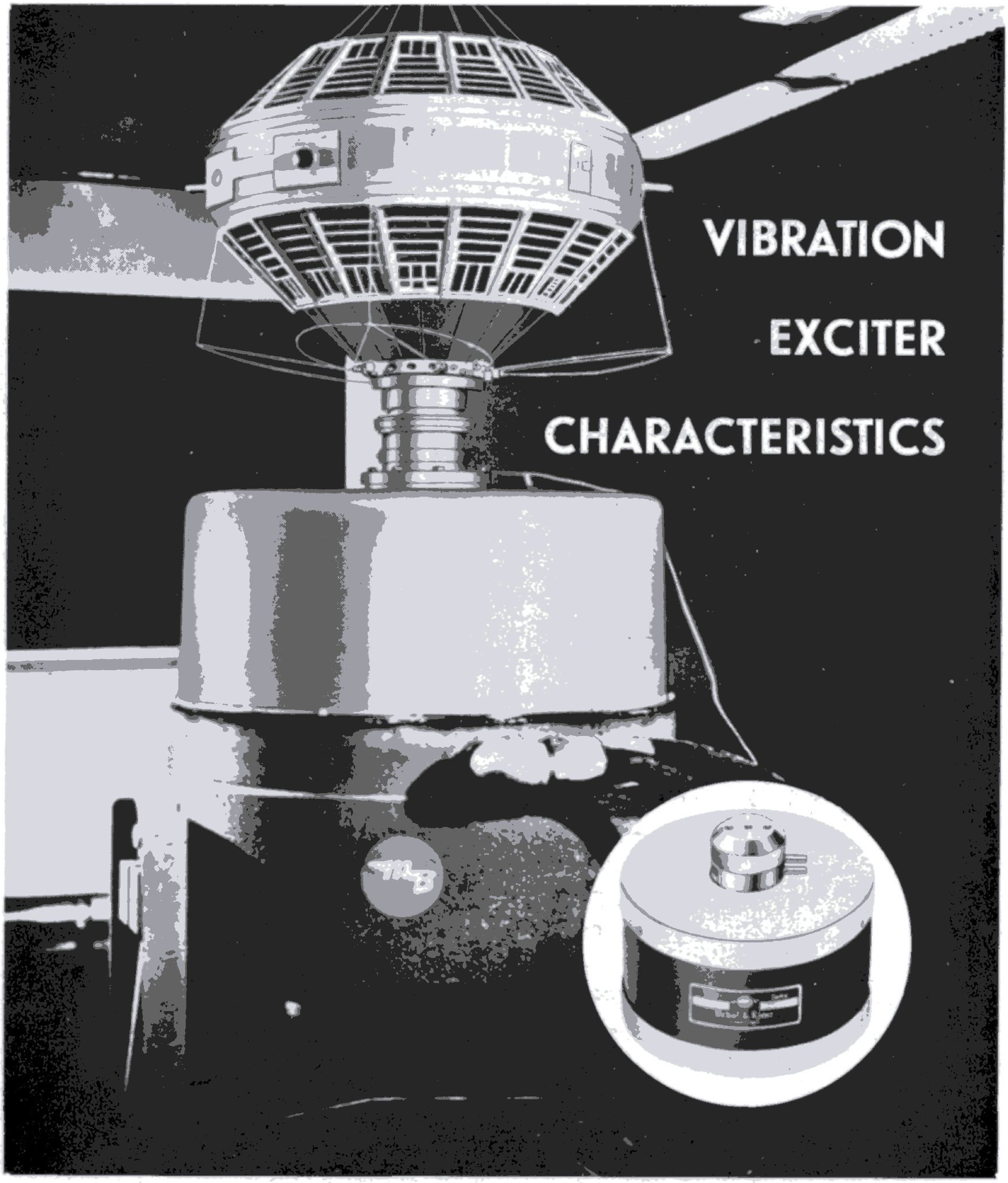

No. 3

1960

PREVIOUSLY ISSUED NUMBERS OF BRÜEL & KJÆR TECHNICAL REVIEW

1-1954	Noise Measurements with the Audio Frequency Spectrometer Type 2109.
2-1954	The Automatic Analysis of Distortion in Sound Reproducing Equipment.
3-1954	Mobile Laboratories.
4-1954	Tube Measurements and Sound Insulation. Calibration of Probe-Tube Microphones.
1-1955	The Standing Wave Apparatus.
2-1955	Modern Accelerometers.
3-1955	Non Linearity of Condenser Microphones.
4-1955	A New Beat Frequency Oscillator Type 1014.
1-1956	Noise Measurements and Analyses.
2-1956	Use of Resistance Strain Gauges to determine Friction Coefficients.
3-1956	Determination of Acoustical Quality of Rooms from Reverberation Curves.
4-1956	Electrical Measurements of Mechanical Vibrations.
1-1957	Strain Gauge Measurements.
2-1957	Sound Analysis in Industrial Processes and Production.
3-1957	Measurement on Tape Recorders.
4-1957	Measurements of Modules of Elasticity and Loss Factor for Solid Materials. Surface Roughness Measurements.
1-1958	Measurement of the Complex Modulus of Elasticity.
2-1958	Vibration Testing of Components. Automatic Level Regulation of Vibration Exciters.
3-1958	Design Features in Microphone Amplifier Type 2603 and A. F. Spectrometer Type 2110. A true RMS Instrument.
4-1958	Microphonics in Vacuum Tubes.
1-1959	A New Condenser Microphone. Free Field Response of Condenser Microphones.
2-1959	Free Field Response of Condenser Microphones (Part II).
3-1959	Frequency-Amplitude Analyses of Dynamic Strain and its Use in Modern Measuring Technique.
4-1959	Automatic Recording of Amplitude Density Curves.
1-1960	Pressure Equalization of Condenser Microphones and Performance at Varying Altitudes.
2-1960	Aerodynamically Induced Noice of Microphones and Windscreens.

TECHNICAL REVIEW

No. 3 - 1960

CONTENT

DET BERLINGSKE BOGTRYKKERI

Vibration Exciter Characteristics

by

Jens T. Broch, Dipl. Ing. E. T. H.

SUMMARY

The general mechanical and electrical characteristics of electrodynamic vibration exciters (shakers) are briefly outlined, and the analogous electrical circuit of a vibrator derived. By comparing the frequency characteristics of two different shaker models the influence of the drive coil resistance upon the shaker performance is demonstrated. Finally the electrical and mechanical performance of the B & K Calibration Exciter Type 4290 is described with special regard to the calibration of piezoelectric accelerometers.

RÉSUMÉ

Les caractéristiques générales mécaniques et électriques des tables d'essais vibratoires à commande électro-dynamique sont rappelées, ainsi que leur analogue électrique dérivé. L'influence de la résistance interne des enroulements de commande est démontrée par l'étude de la caractéristique de fréquence. Finalement, les performances électriques et mécaniques de l'Excitateur d'Etalonnage B & K type 4290 sont décrites, spécialement en vue de l'étalonnage des accéléromètres piezo-électriques.

ZUSAMMENFASSUNG

Behandelt werden die allgemeinen mechanischen und elektrischen Eigenschaften elektrodynamischer Schwingungserreger (Schütteltische) sowie deren Ersatzschaltbild. An Hand der Frequenzkurven zweier verschiedener Erreger wird der Einfluss des Tauchspulwiderstands nachgewiesen. Abschliessend werden die Eigenschaften des B & K – Eicherregers Typ 4290 beschrieben, welcher für die Eichung piezoelektrischer Beschleunigungsaufnehmer entwickelt wurde.

A vibration exciter (shaker) is an electro-mechanical device which transforms electrical a. c. signals into mechanical vibrations and is used to excite vibrations in bodies or structures for testing purposes. During the past decade a wide variety of vibration exciters have been developed, their fields of application ranging from fatigue testing of automobile, missile and aircraft components, to the calibration of vibration pick-ups. The special field of application for which a particular vibration exciter is suitable, is normally determined by its frequency range, maximum stroke and force ratings. In the following, the typical characteristics of vibration exciters will be briefly outlined with special regard to the B & K Calibration Exciter Type 4290.

Although different transducing principles can be employed in the design of vibrators, most modern vibration exciters are based on the electro-dynamic principle, where an a. c. signal is applied to a coil placed within a strong magnetic field.

Fig. 1 shows a sketch illustrating the basic design of a shaker. It consists of a magnet which produces the required constant magnetic field, a coil which is fed from an a. c. signal source, the moving element (on which the coil is mounted), and the flexures holding the coil and moving element in position, with respect to the constant magnetic field. The magnetic field strength and the coil diameter, number of turns and current determine the force available. This force is limited by the cooling provided for the coil and the materials and mechanical strength of the moving parts.

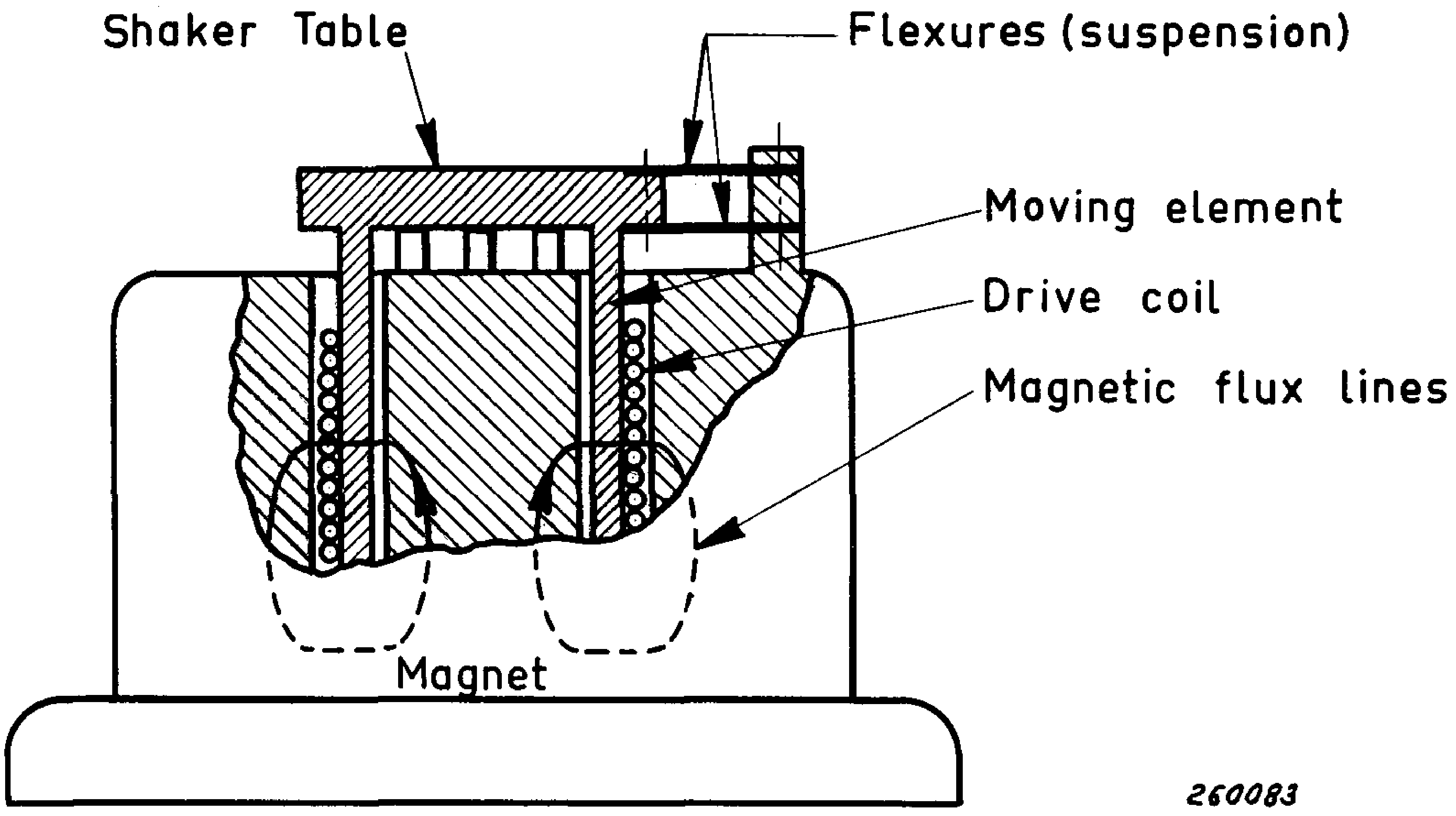

Fig. 1. Basic design of an electro-dynamic vibration exciter.

Ideally the coil and moving element should be a rigid unit where all points move in phase. Additionally, the ideal suspension of the moving element should be of such a nature that only a one-dimensional movement takes place, and finally the loading of the shaker table by a test specimen, should in no way influence the table motion. Unfortunately, it is impossible to fulfill these ideal conditions and compromises are therefore necessary.

As all bodies are more or less elastic, the requirement of rigidity must be compromised with the size and design of the moving element. This size is also pre-determined by the size and shape of the specimen under test, as this also influences the movement of the moving element. To achieve pure one-dimensional translatory motion, the moving element must either be suspended in such a way that no other modes of movement is possible, or forces which may cause such motion, must be eliminated.

The suspension of the test specimen upon the table also greatly influences the mode of vibration. For example, if the dynamic center of gravity of the test specimen, at any particular test frequency, deviates from the axis of the moving element, rotational moments are produced, which will cause non-translatory motion of the specimen and moving element. Similarly, if parts of the specimen or moving element resonate at some particular frequency, within the test range, the center of gravity may "shift" during the test and non-translatory movements be developed.

To minimize the influence of specimen resonances upon the motion of the moving element, the mass release (i. e. mass isolated when sweeping frequency upward through any resonance) should be as small as possible. However, this means that to produce a certain acceleration of the specimen a rather high force is necessary, due to the great mass of the moving element. Furthermore, adding a mass on the moving element normally reduces the useful frequency range of the shaker.

By introducing variable compensation networks or servocontrol of the moving element motion it is possible to "compensate" for the variation in load, with frequency, caused by specimen resonances. Smaller moving masses can then be used for the same test.

If servocontrol is used rather than an increase in mass to minimize influence of resonances, two major advantages are gained: —

(1) A much greater part of the force produced by the vibration exciter is transferred to the the test specimen.

(2) The useful frequency range of the exciter can be extended because of the reduction in moving mass.

Before describing an actual wide-range low "G" vibration exciter for frequency response calibration of vibration pick-ups, the general frequency characteristics of vibrators should be briefly outlined, and the electrical analogue of the mechanical circuit developed, the latter being a powerful tool in the analyses of loaded table operation.

In Fig. 2 a typical frequency characteristic for a modern electrodynamic vibration exciter is shown. The vibrator is driven from a constant current level source, i. e. a constant driving force is delivered to the moving element. The actual acceleration level of the shaker table is then plotted as a function of frequency, and the graph divided into different sections A, B, C, and D, which are described below.

When D. C. is supplied to the shaker drive coil, a constant force is developed which will cause the moving element to deflect, the magnitude of the deflection being determined by the stiffness of the mechanical suspension arrangement. At very low frequencies the deflection of the moving element will thus be stiffness controlled, i. e. constant displacement level conditions will be present at the shaker table, region A in Fig. 2. (Constant displacement level conditions are represented by a slope of 12 db/octave in the graph).

If the frequency of the drive signal is increased, the resonance between the overall mass of the moving element assembly and the suspension "spring" will cause a relatively great increase in the table's amplitude, region B in Fig. 2. Above the suspension resonance the mass of the moving element will control the table motion and a region of constant acceleration is developed, C in Fig. 2.

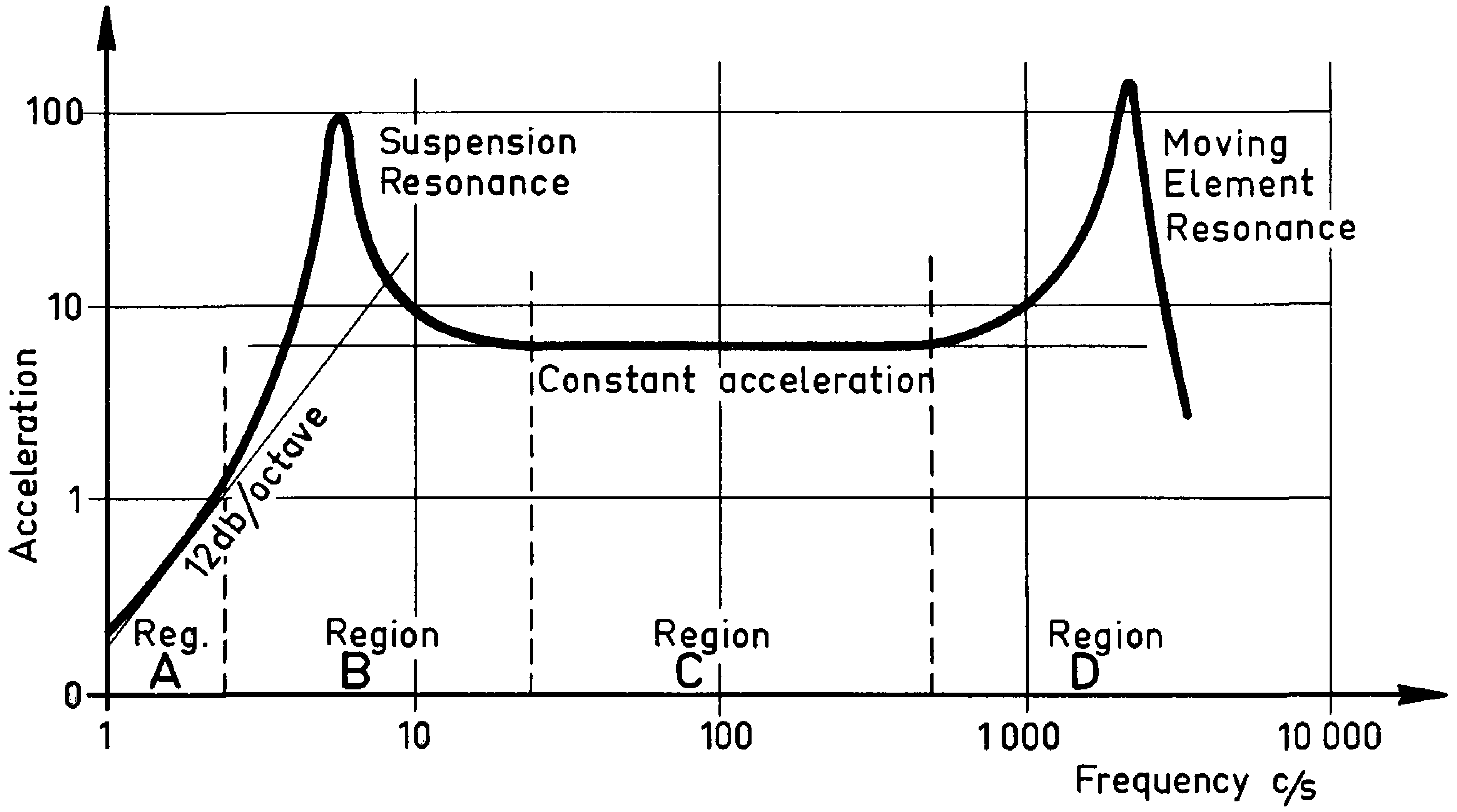

Fig. 2. Basic acceleration vs. frequency response of vibration exciters when the input current to the drive coil is kept constant independent of frequency.

At still higher frequencies the different parts of the moving element itself will resonate and cause major irregularities in the frequency characteristic. In Fig. 2 only one moving element resonance is shown. The main resonance is normally of the axial type, and is produced by the spring/mass system of the moving element in the axial direction, see also Fig. 3. (When the coil and shaker table is one compact unit, this main resonance need not be axial, as will be shown later). This resonance limits the upper end of the useful frequency range.

The acceleration vs. frequency characteristic of electrodynamic vibrators are more or less similar for all shakers when the shaker is driven from a constant current level source. However, amplifiers which effectively transform the available electrical power into mechanical force may usually be well approximated by a constant voltage level source. The acceleration vs. frequency characteristic of electrodynamic vibration exciters subjected to these conditions vary considerably, depending upon the electrical resistance of the drive coil winding and the mechanical damping of the suspension arrangement. In Fig. 4 the frequency response of two modern vibrators are shown, the drive coils of which were fed from a constant voltage level source.

Fig. 4a shows the characteristics of a low-resistance, heavy-duty shaker for fatigue testing of components (MB Electronics, Model C25H), and in Fig. 4b the response curve of a small, high-resistance vibrator for frequency response calibration of vibration pick-ups (B & K type 4290) is shown.

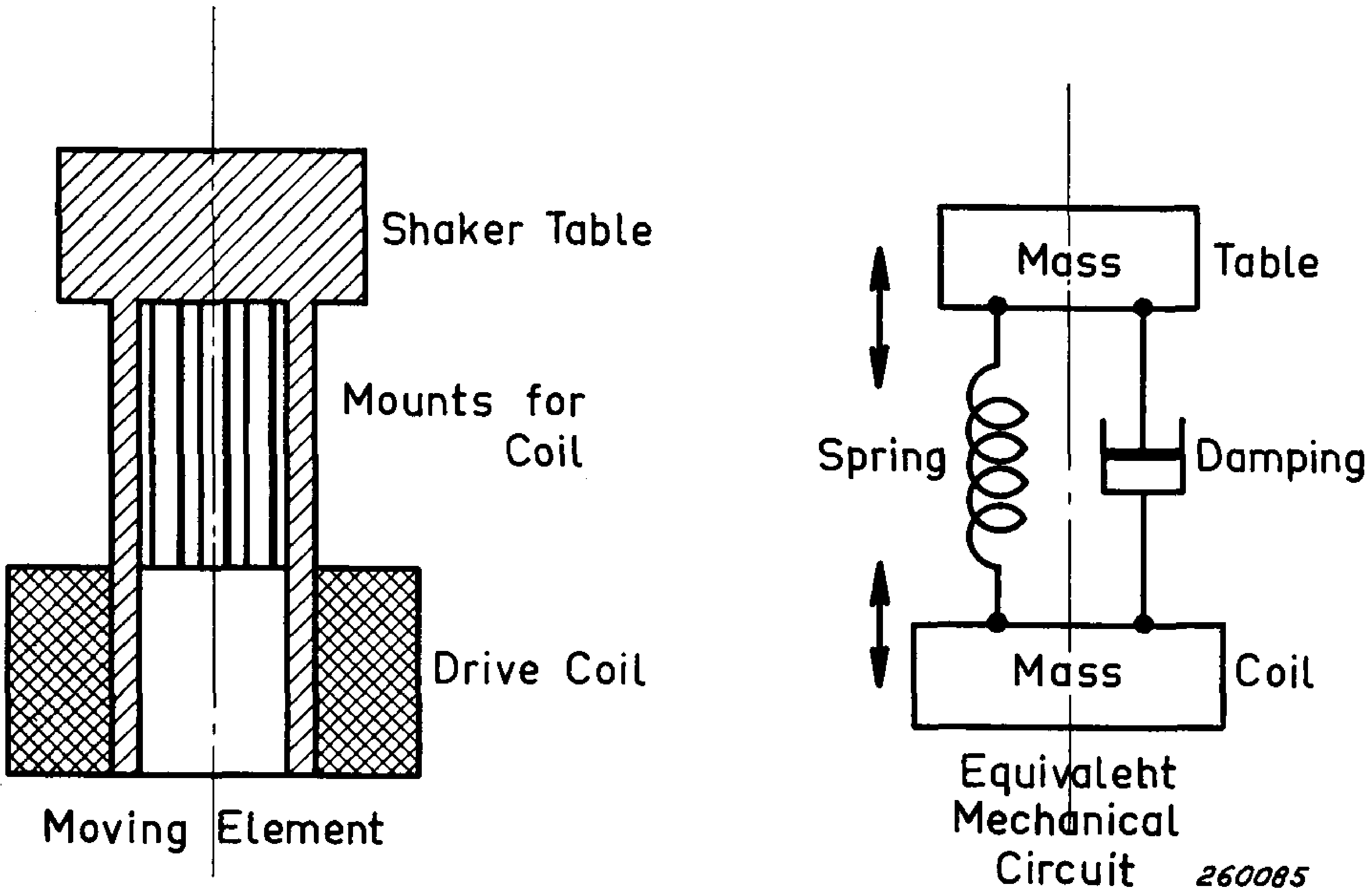

Fig. 3. Sketch illustrating how the basic axial resonance of the moving element of large sized vibration exciters is produced.

In the case of the low-resistance, heavy-duty shaker (Fig. 4a) the suspension resonance is completely eliminated due to the electrical damping effect of the coil winding. This damping effect is caused by the low resistance which almost short-circuits the back e. m. f. induced in the coil, when it moves in the constant magnetic field of the shaker. As the back e. m. f. is proportional to the coil velocity $(e \sim \frac{d\phi}{dt})$ the movement of the moving element in this frequency region (corresponding to region B in Fig. 2) will be velocity controlled, and the acceleration vs. frequency characteristic shows a slope of 6 db/octave. At higher frequencies, where the movement of the moving element is mass-controlled, the acceleration level of the element will be constant. However, as the electrical resistance of the coil winding is low, the constant acceleration level region is normally small, and the inductance of the drive coil causes the acceleration vs. frequency characteristic to drop off with frequency. The "middle" region of the response curve shown in Fig. 4a will therefore show the character of a very well-damped resonance. As explained above, this resonance is caused by a combination of mechanical and electrical factors and may be termed "electro-mechanical resonance". (By some shaker manufacturers the phenomenon is designated as "electrical resonance").

At high frequencies the importance of the drive coil reactance increases $(X_c =$

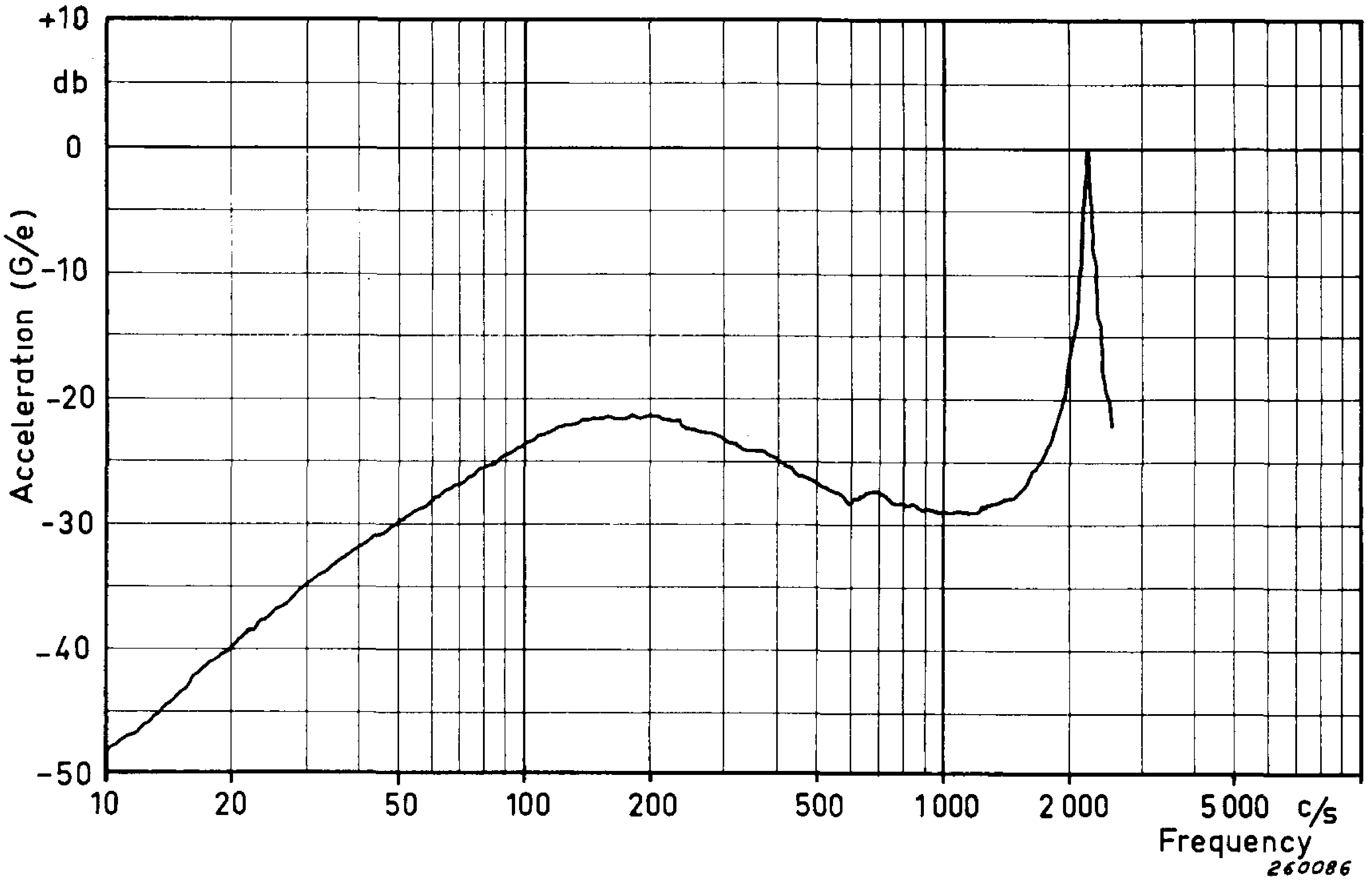

a

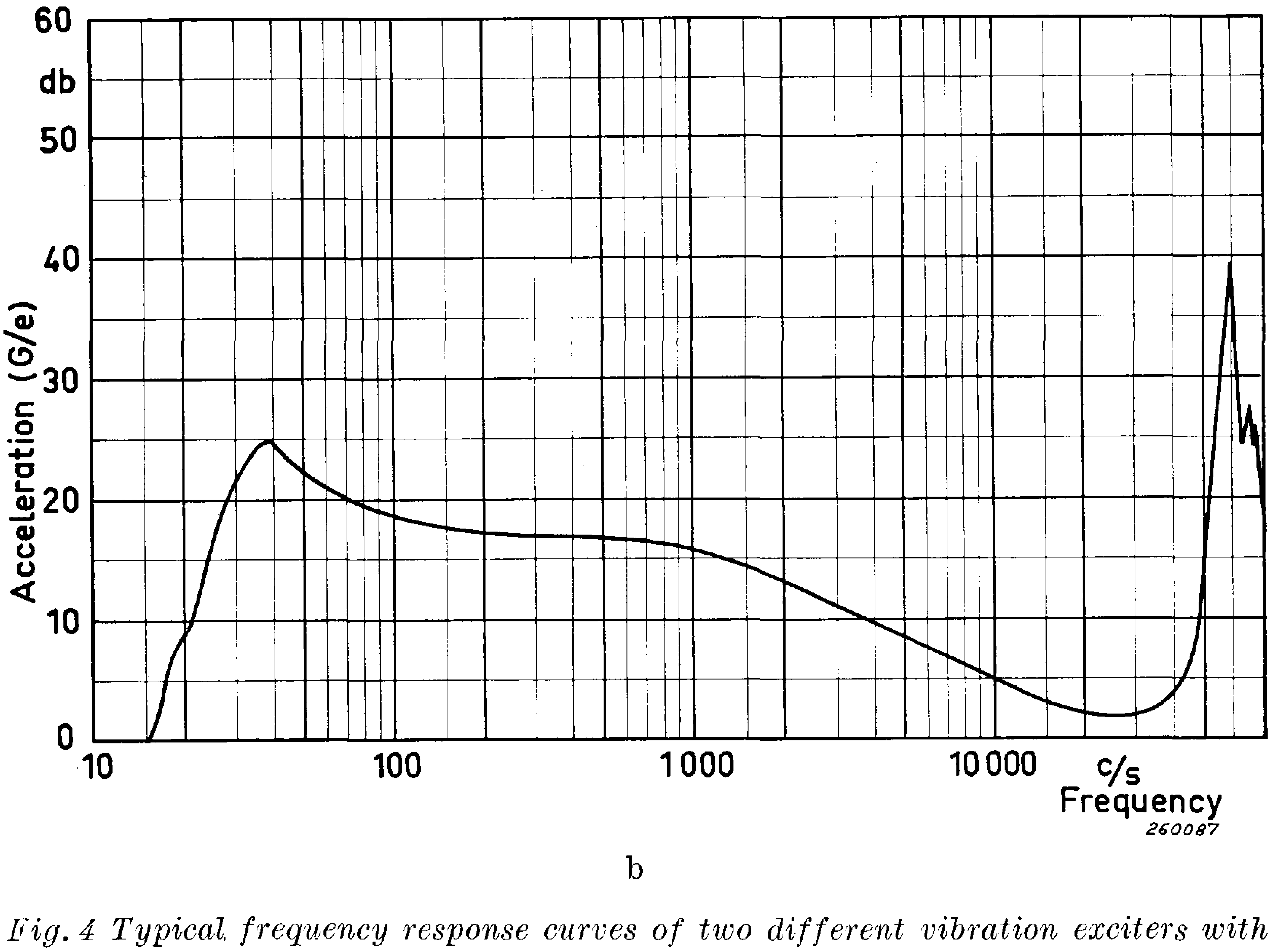

b

Fig. 4 Typical frequency response curves of two different vibration exciters with constant voltage level drive.
(a) Low-resistance, heavy-duty vibrator (MB Electronics, Model C25H).
(b) High-resistance vibrator (B & K Type 4290).

$2\pi f L$) and the acceleration vs. frequency characteristic drops off until the resonances of the moving element starts to influence the shaker table motion. If the electrical resistance of the drive coil is great, the acceleration vs. frequency characteristic for constant voltage level drive (Fig. 4b) will, at lower and medium frequencies, not differ from the corresponding curve for constant current level drive, as the induced back e.m.f. in this case does not influence the current in the coil to any great extent. However, at higher frequencies where the reactance of the coil is the predominant impedance element, the response curve will be similar to that of the low-resistance shaker for a constant voltage level drive. No "electro-mechanical resonance" is present because of the lack of table motion control by the back e. m. f.

On the basis of the knowledge of the physical behaviour and the frequency characteristic of a vibration exciter an analogous electrical circuit may be derived. Using the so-called mobility type analogue, where electric current

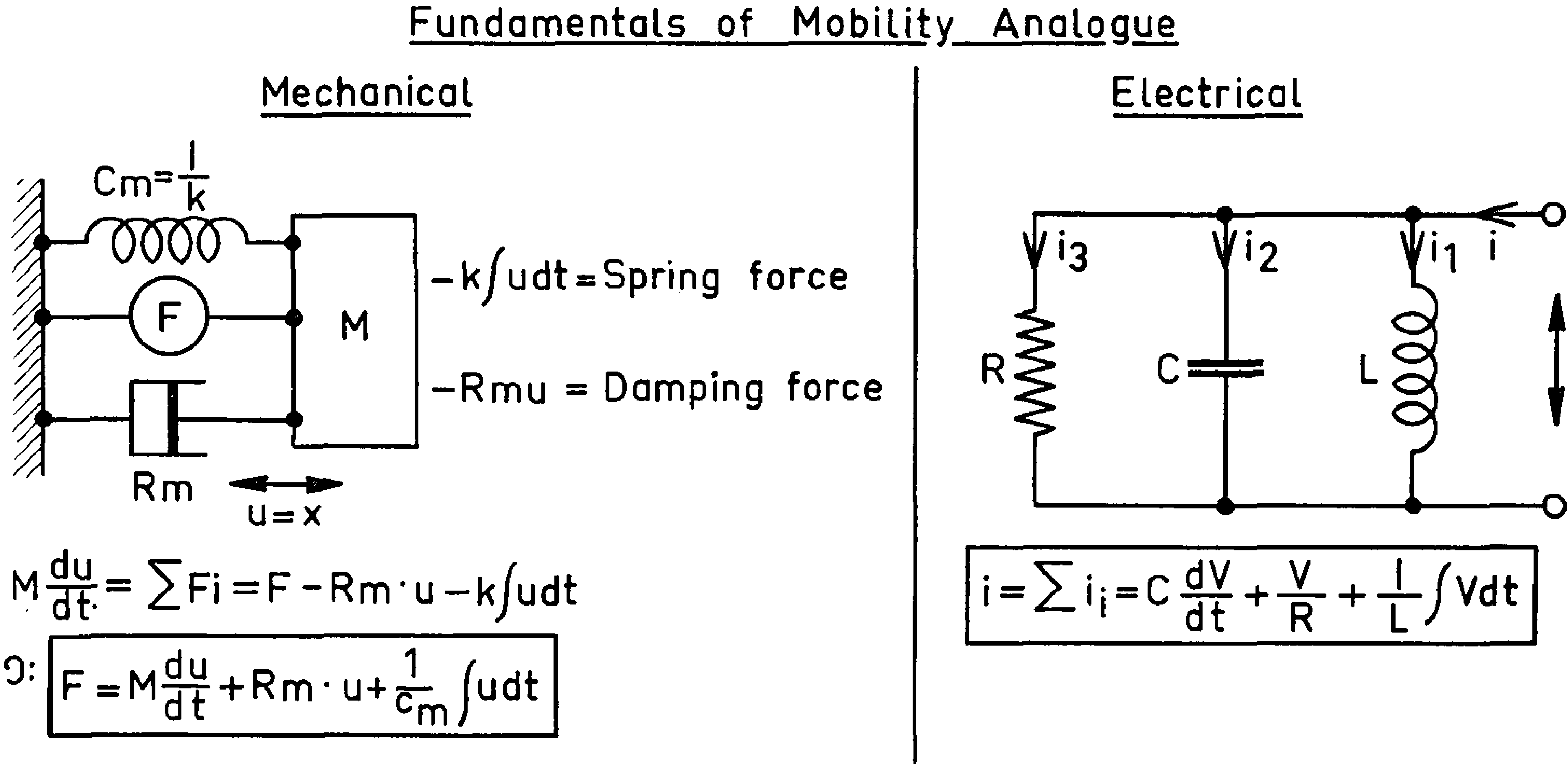

$$M\frac{du}{dt} = \sum F_i = F - R_m \cdot u - k\int u\,dt$$

ɔ: $$\boxed{F = M\frac{du}{dt} + R_m \cdot u + \frac{1}{C_m}\int u\,dt}$$

$$\boxed{i = \sum i_i = C\frac{dV}{dt} + \frac{V}{R} + \frac{1}{L}\int V\,dt}$$

F = Force	----------	i = Current
u = Velocity	----------	V = Voltage
M = Mass	----------	C = Capacity
$\frac{1}{Rm}$ = Inverse mech. Damping	----------	R = Resistance
Cm = Mech. Compliance $\left(=\frac{1}{k}=\frac{1}{\text{stiffness}}\right)$	----------	L = Inductance

260089

Fig. 5. Table showing the basic elements of the mobility analogue technique.

corresponds to mechanical force and electric voltage to velocity, the "equivalent circuit" of a shaker will be as shown in Fig. 6. The table given in Fig. 5, indicates the principles of the mobility analogue, which is the most convenient type of analogue to use in the study of the frequency response of mechanical systems.

The general analogue circuit shown in Fig. 6 may be modified according to the particular shaker and experiment which is being studied. For example in the case of table motion studies of low-resistance, heavy-duty shakers driven by a constant voltage level source the suspension resonance is eliminated and

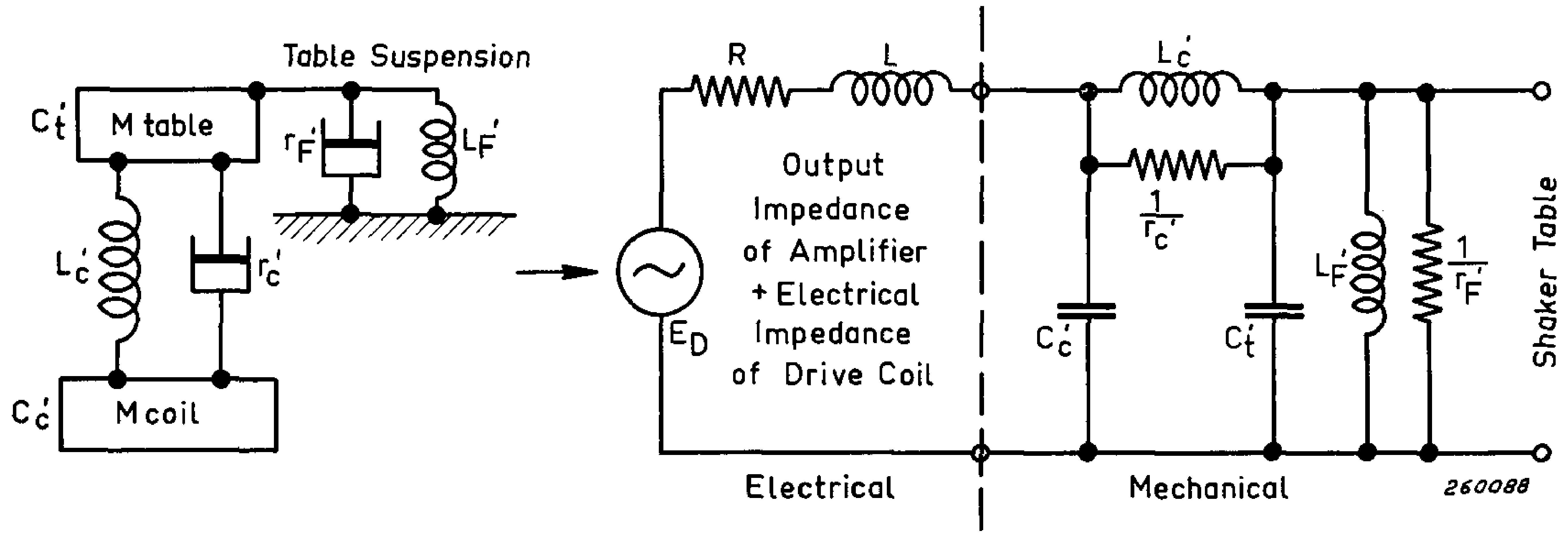

Fig. 6. Mobility type analogue of an unloaded vibration exciter.

the elements marked L'_F and $\frac{1}{r_F'}$ in the circuit can be neglected. By studying portions of the frequency response, other simplifying assumptions may be made. During operation well below the main moving element resonance, the elements L'_C and $\frac{1}{r_C'}$ can also be omitted and the table and coil masses combined into one mass. At very low frequencies (below "electro-mechanical resonance") the inductance L of the drive coil can also be disregarded.

However, if the operation of high-resistance shakers is being investigated the suspension resonance elements L'_F and $\frac{1}{r_F'}$ must be taken into account with the exception of frequencies well above this resonance.

Fig. 7 shows the practical design of a low-resistance, heavy-duty vibration exciter (MB Electronics, Model C125) and in Fig. 8 a photo of a high-resistance vibrator (B & K Type 4290) is shown.

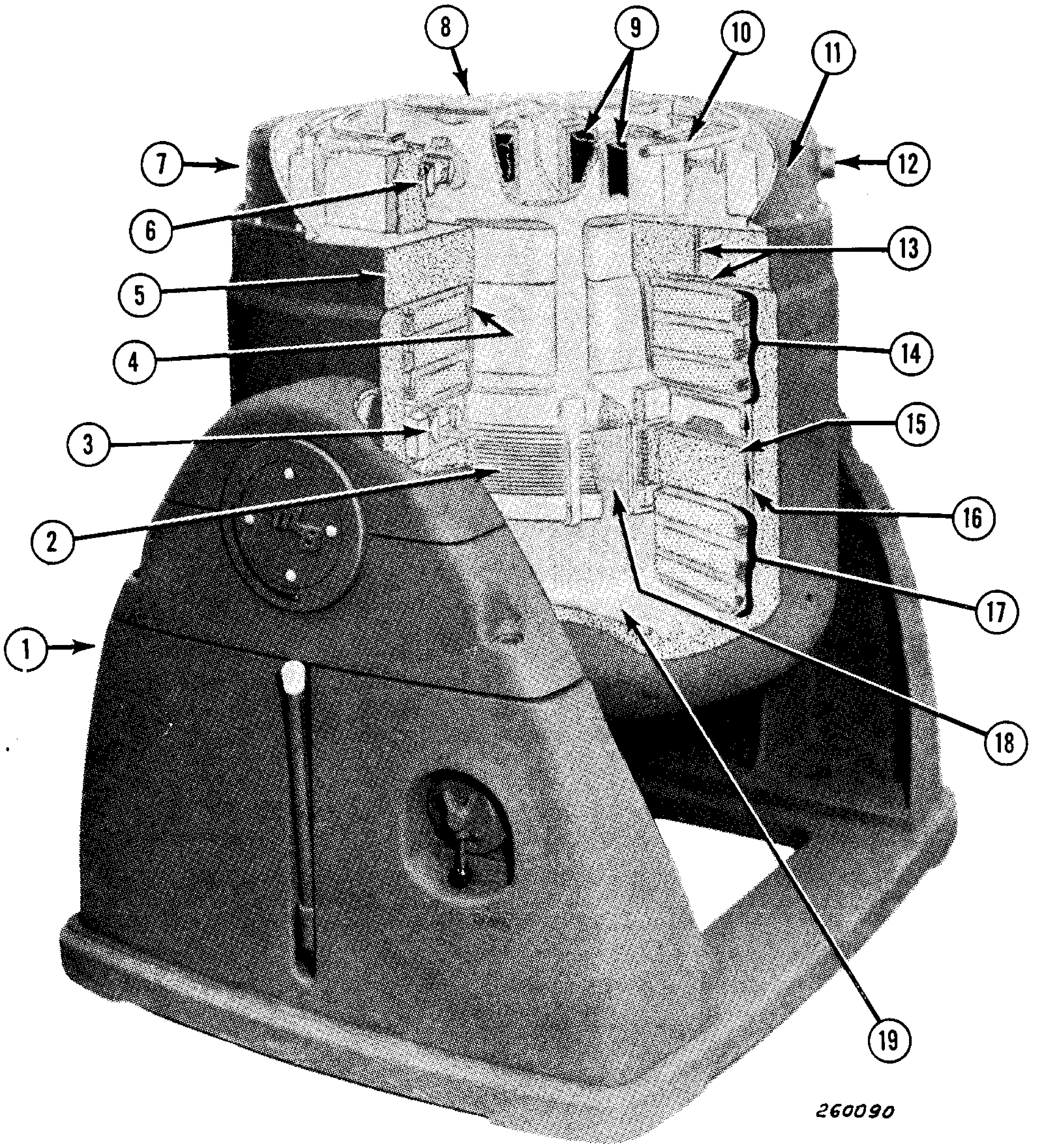

1. Pedestal
2. Driver Coil
3. Lower Rockers
4. Fiber Glass Coil Enclosure
5. Top Cover Casting
6. Upper Rockers
7. Dome
8. Table & Moving Element Ass'y
9. Rubber Flexures
10. Ring Cooling Assembly
11. Accelerometer Connector
12. Power Receptacle
13. Clamping Screw, Pressure Pad
14. Upper Group of Fie~~ld C~~oils
15. Cover Assembly
16. Oil Flow Channel
17. Lower Group of Field Coils
18. Pole Piece
19. Body Casting and Cavity

Fig. 7. Cut-away view of a modern, heavy-duty shaker (MB Electronics, Model C125).

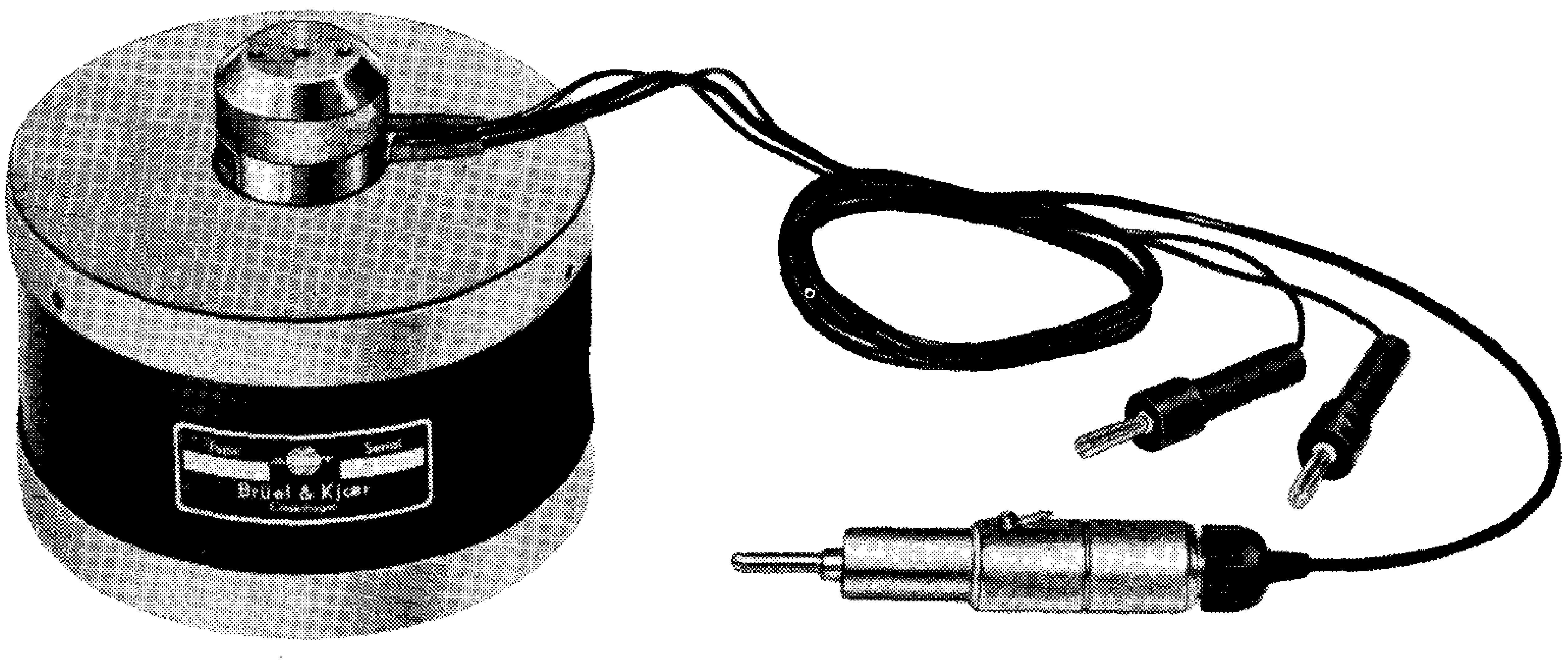

Fig. 8. Photo of the Calibration Exciter Type 4290.

Fig. 9 shows a drawing of the moving element of Type 4290. The coil and shaker table is in this case one compact unit, which ensures a very wide frequency range for the vibration exciter, this being possible because of its low force rating. It can be seen from Fig. 9 that the drive coil is wound on the metal structure of the moving element providing an extremely rigid construction to the unit.

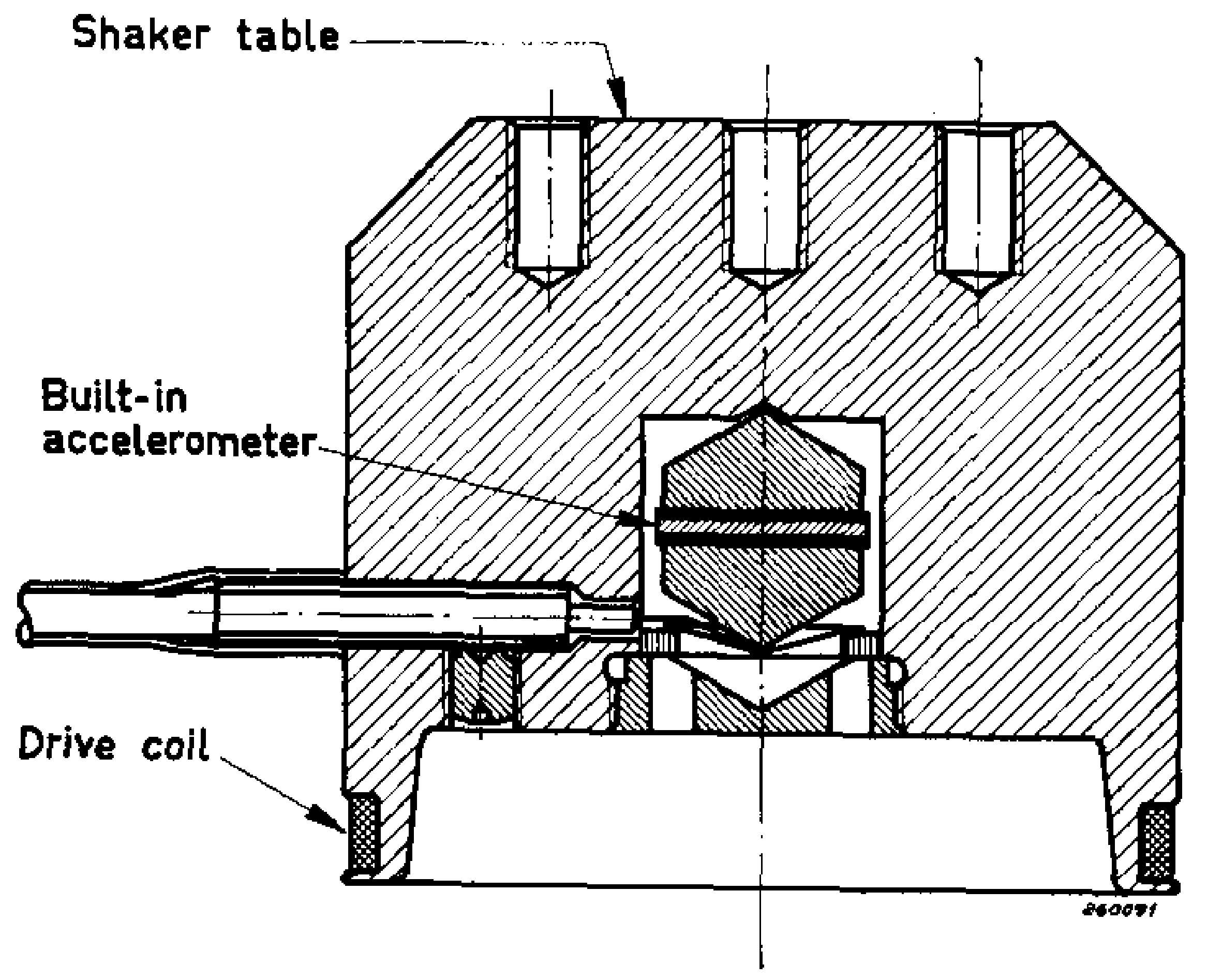

Fig. 9. Sketch of Type 4290 moving element.

However, at high frequencies eddy currents in the metal will cause a slight drop-off in the acceleration vs. frequency characteristic of the vibrator, even

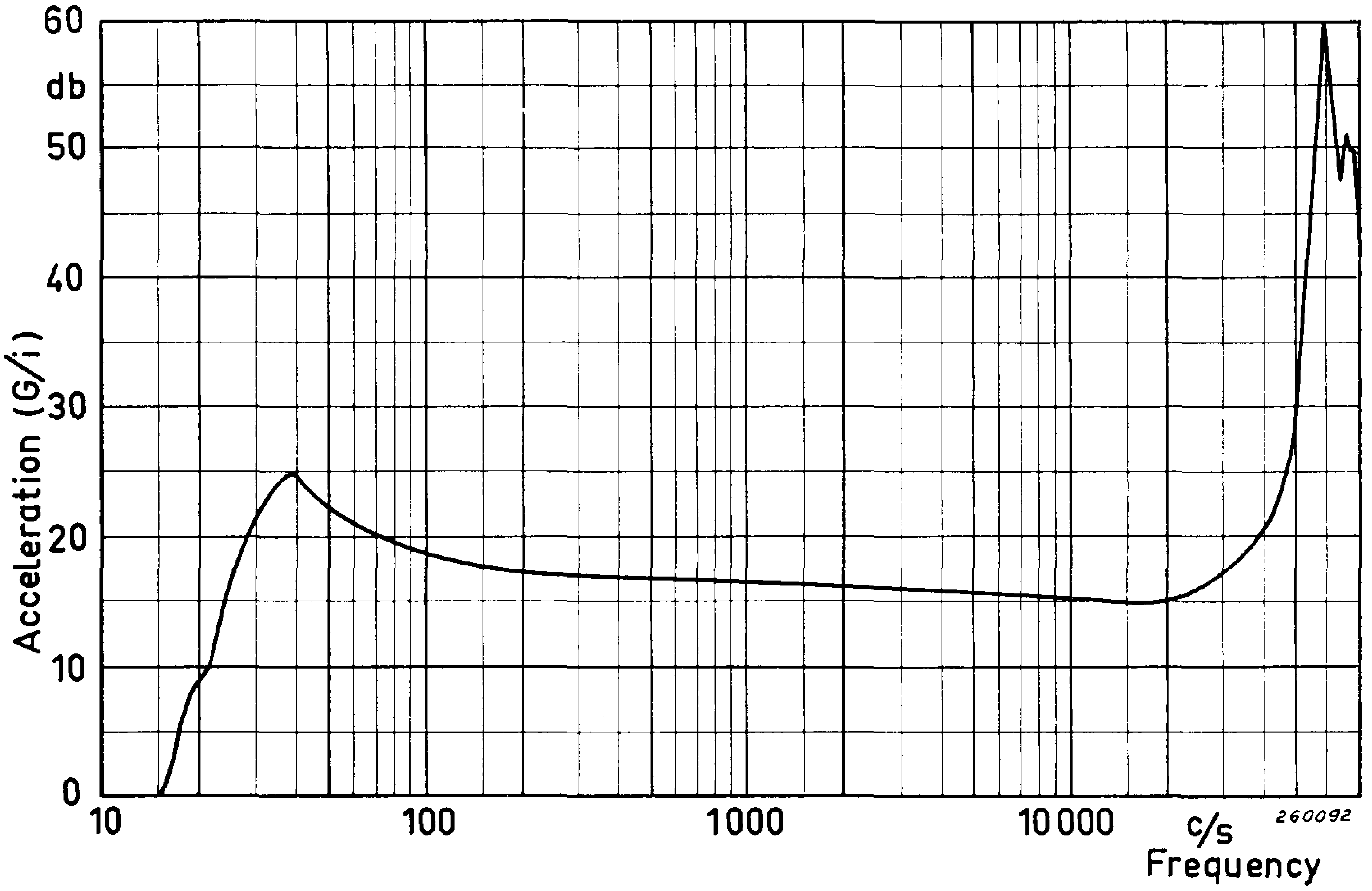

Fig. 10. Typical acceleration vs. frequency characteristic of Type 4290 with constant current level input.

when the shaker is driven by a constant current level source, see Fig. 10. Due to the compactness of the unit, the main resonance of the moving element will not be of the axial type but of the mode shown in Fig. 11.

So far only the unloaded operation of the shaker has been considered. If a

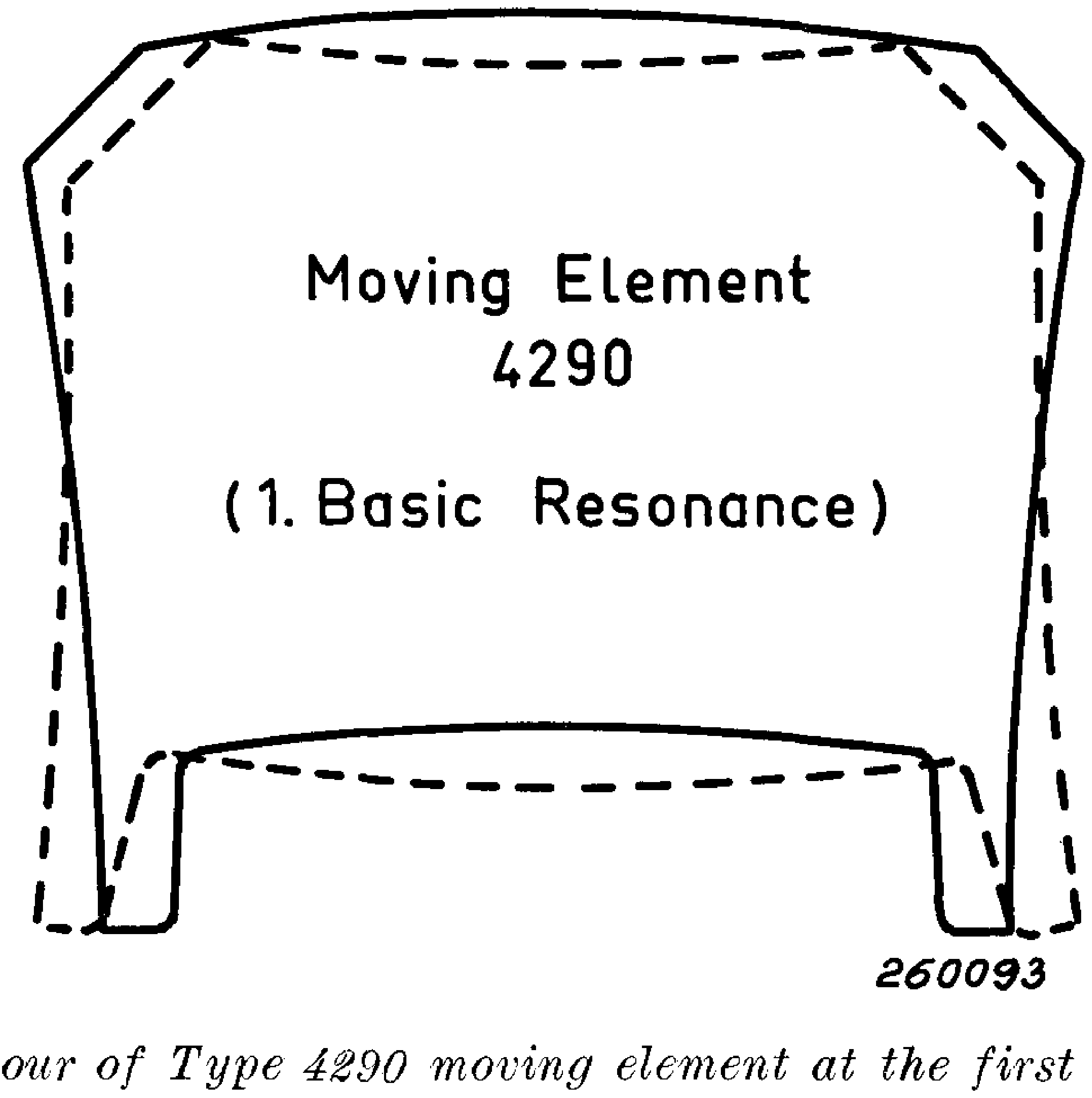

Fig. 11. Behaviour of Type 4290 moving element at the first basic resonance.

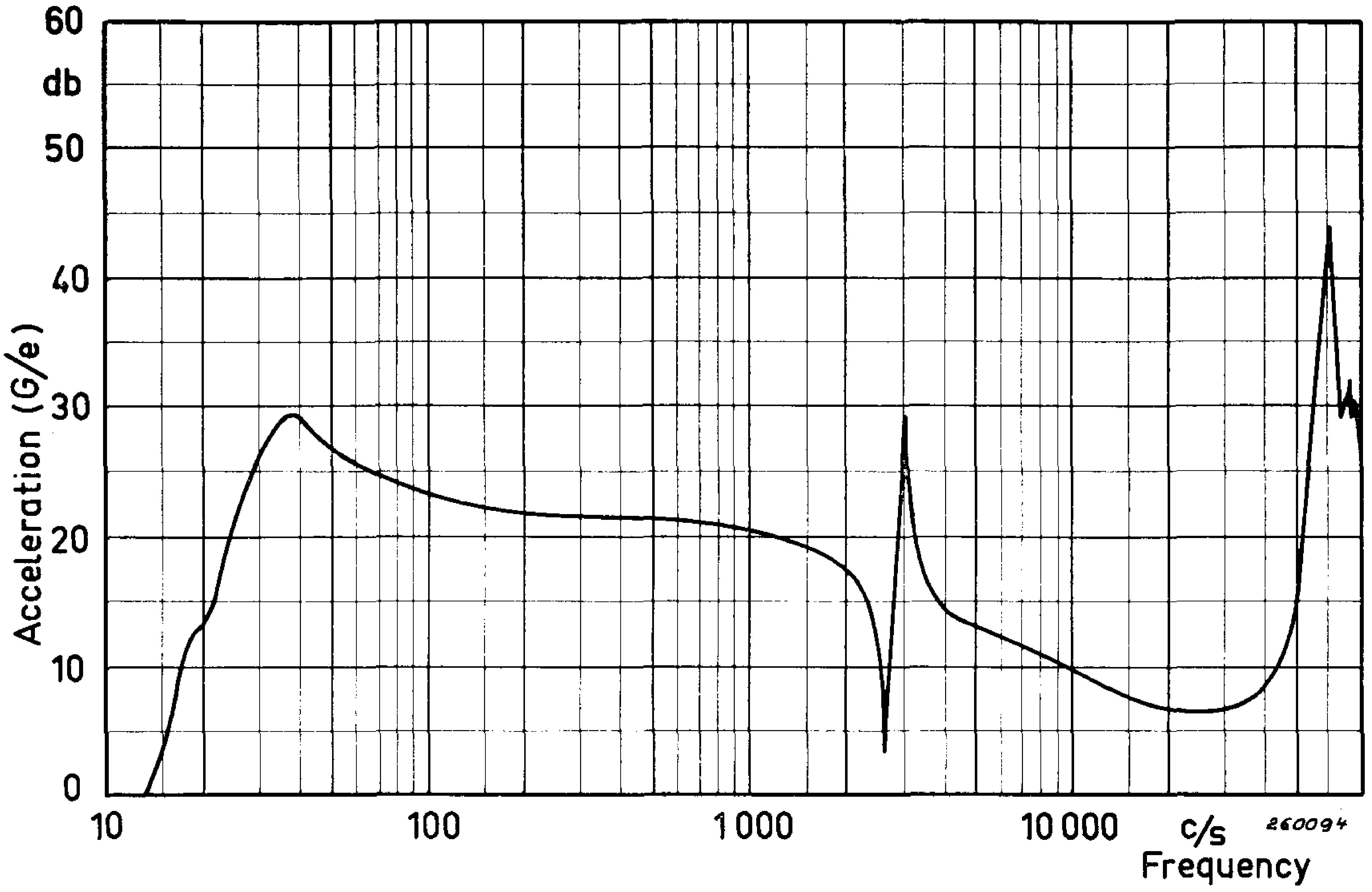

Fig. 12. Typical acceleration vs. frequency response of a shaker when loaded with a single resonant specimen.

resonant specimen is mounted on the table the forces developed in the specimen around the resonant frequency will "work back" on the shaker, and the resultant acceleration vs. frequency characteristic of the table motion will be of the type shown in Fig. 12. In this case only one specimen resonance was

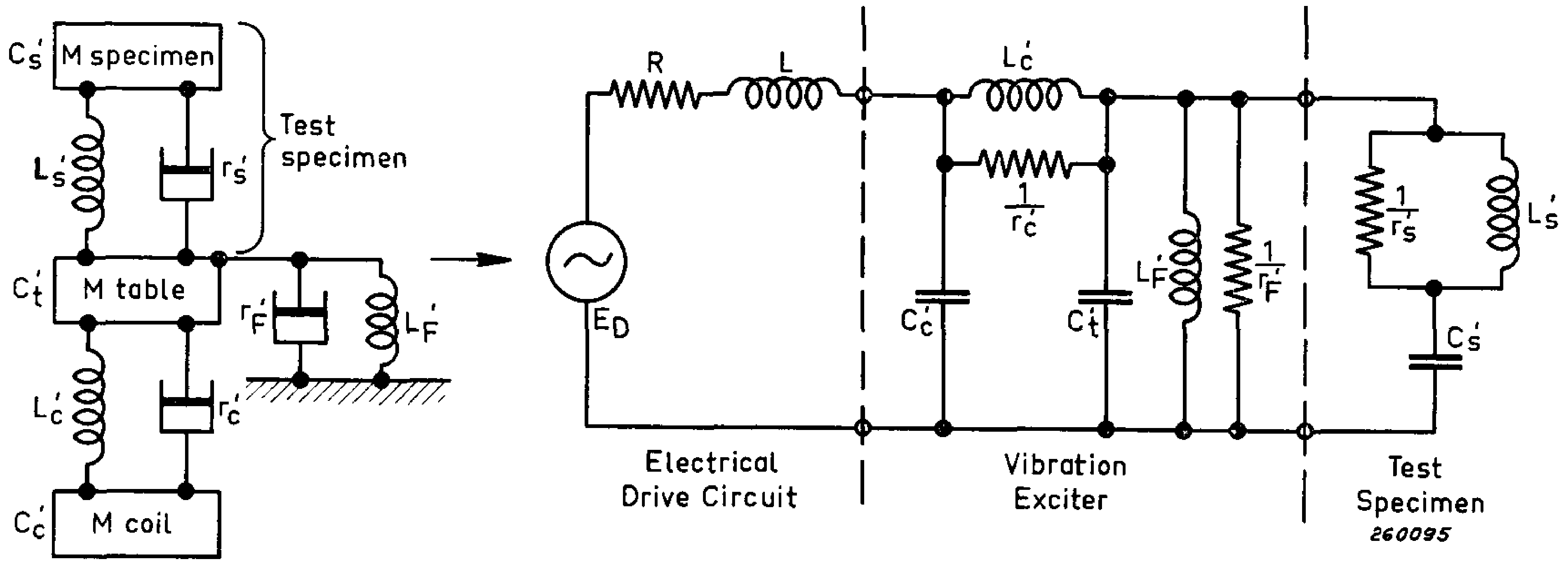

Fig. 13. Mechanical circuit and mobility analogue for a shaker loaded with a single resonant specimen.

within the frequency range of the test equipment, and the shaker was driven from a constant voltage level source.

In Fig. 13 the mechanical as well as the analogous electrical circuit applicable to this test are shown. It can be seen that from the knowledge of the shaker "elements", the specimen resonant frequency and Q (magnification factor of specimen resonance) that the response can be predicted exactly by means of the mobility analogue technique. However, the real importance of this method is not so much to predict the frequency response of a shaker loaded with a single degree of freedom system, but more to enable the calculation of equalizers as used in random motion testing.

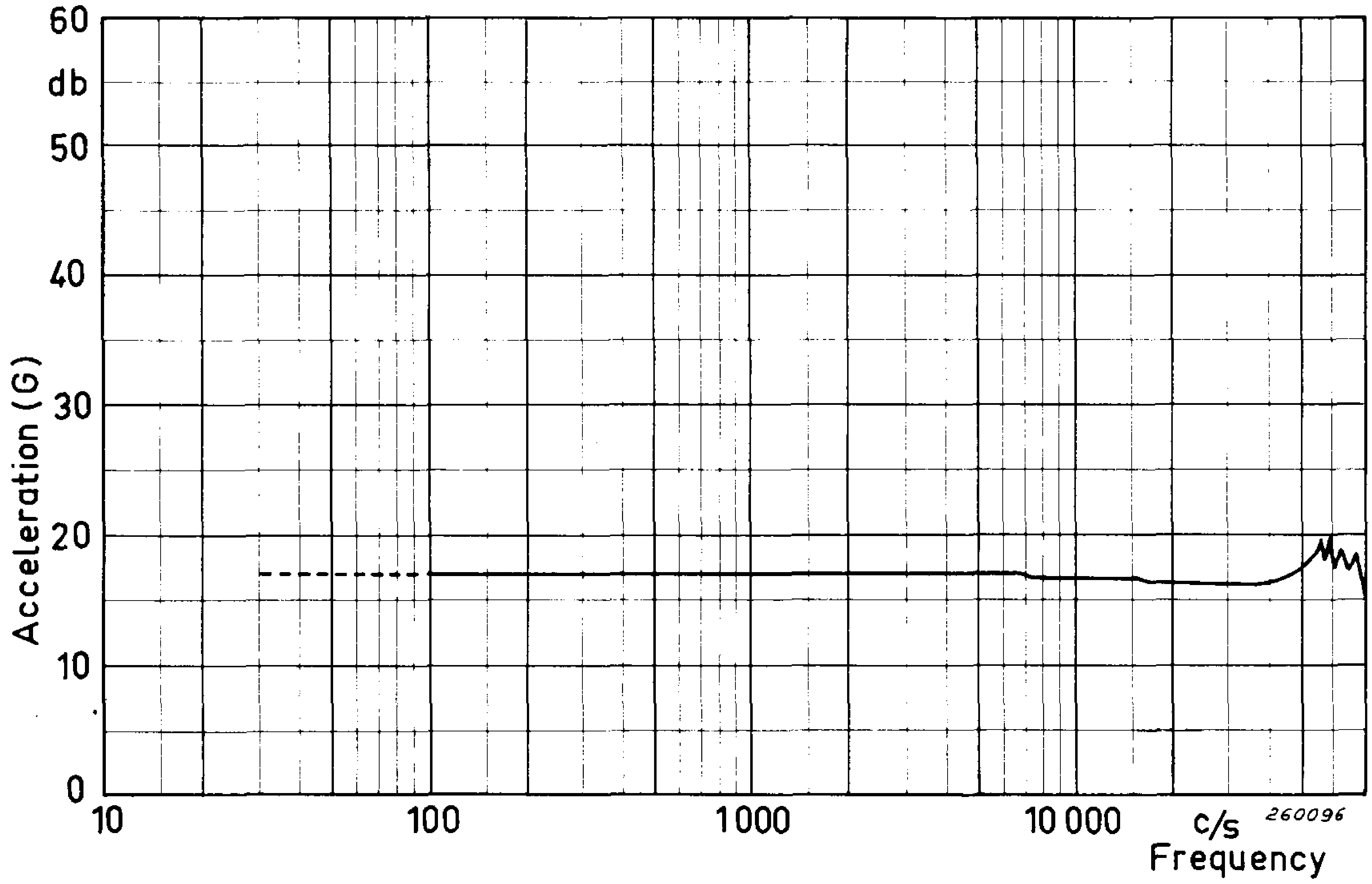

Fig. 14. Typical acceleration vs. frequency response of the Calibration Exciter Type 4290 when the motion of the moving elements is controlled by the built-in accelerometer.

Returning to the description of the Calibration Exciter Type 4290, it can be seen from Fig. 9 that the moving element of the vibrator contains a built-in accelerometer. When the output from this accelerometer is amplified and fed to the compressor input of the electronic drive generator (see for example Fig. 15) an almost flat acceleration vs. frequency characteristic is obtained for the closed loop system from around 30 c/s to above 20 kc/s, Fig. 14.

Fig. 15 shows a typical measuring arrangement for the frequency response calibration of accelerometers. The Calibration Exciter is directly driven from the Beat Frequency Oscillator Type 1013, which covers the frequency range 200 c/s to 200 kc/s. The output from the above mentioned, built-in control accelerometer of Type 4290 is fed to a cathode follower of the Type 2613, amplified in the Microphone Amplifier 2604 and applied to the compressor input of the B.F.O. In this way the output from the B.F.O. is regulated to give a constant acceleration level on the shaker table, see curve b, Fig. 16.

The output from the test accelerometer is amplified in a second Amplifier Type 2604 and automatically recorded as a function of frequency on the Level Recorder Type 2305, see Fig. 16a.

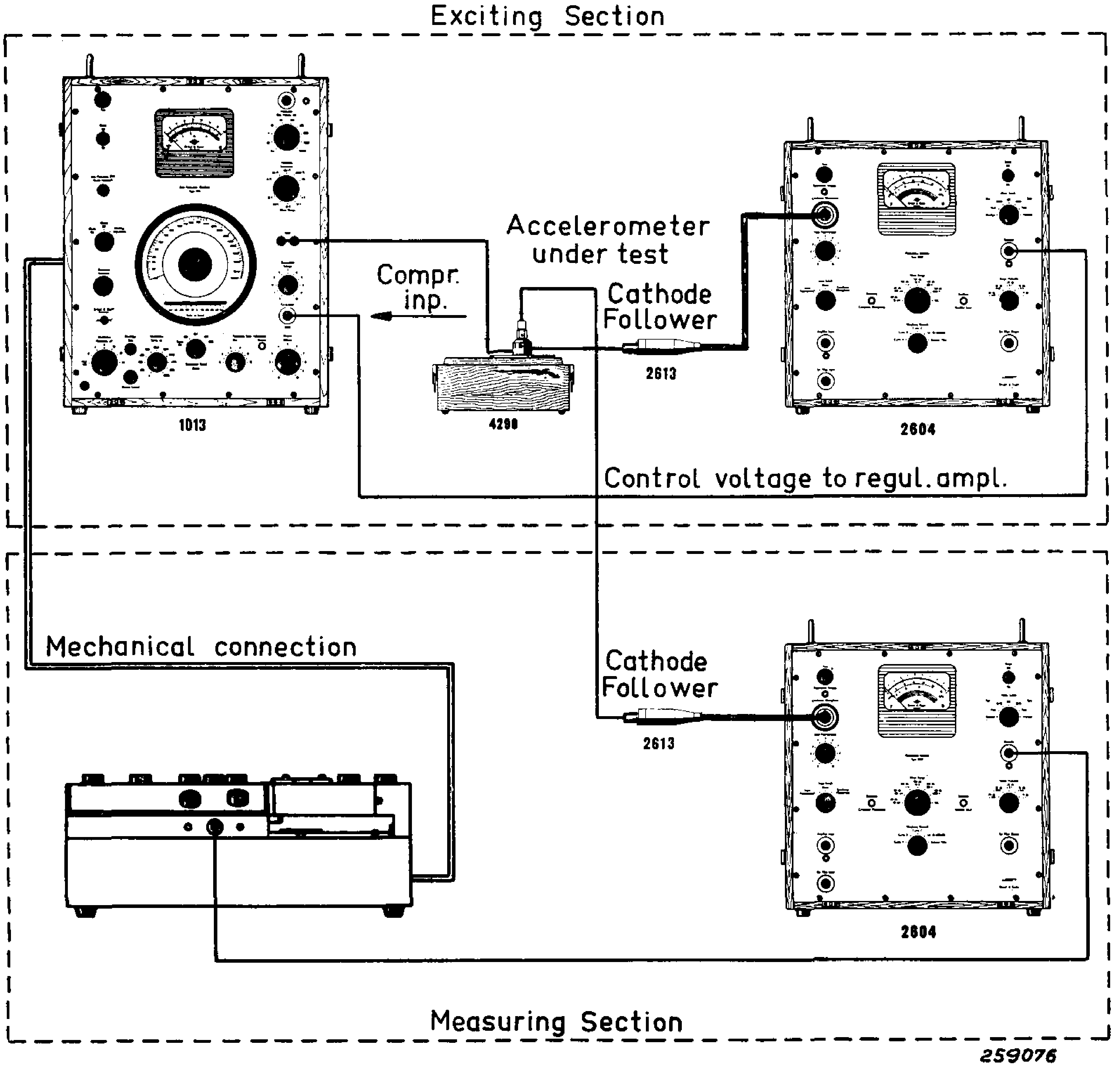

Fig. 15. Measuring arrangement for the frequency response calibration of accelerometers.

As mentioned in the commencing paragraphs, a number of compromises are necessary in the design of a shaker. It is therefore not possible to obtain a high force output if, at the same time, a wide frequency range is desired. The Calibration Exciter Type 4290 can produce a force of 200,000 dynes, corresponding to an acceleration level on the unloaded table of 1 G, at frequencies up to 800 c/s. At higher frequencies the attainable force level is 20,000 dynes (0.1 G acceleration level of unloaded table). These force levels are relatively low, but are more than sufficient for the frequency response calibration of commercially available accelerometers.

Ideally, all points on the moving element should, as previously stated, move the same distance and in phase. Even though the moving element of Type 4290 has been developed with special regard to rigidity and compactness, different parts of the table will move slightly differently, see Fig. 17. At frequencies well below the principal resonance the difference will be negligible, but can be noted by measurements on an accelerometer with a very thin base. If such an accelerometer is firstly mounted on the shaker table, Fig. 18a, in a manner that the full base area is in contact with the table, and then on

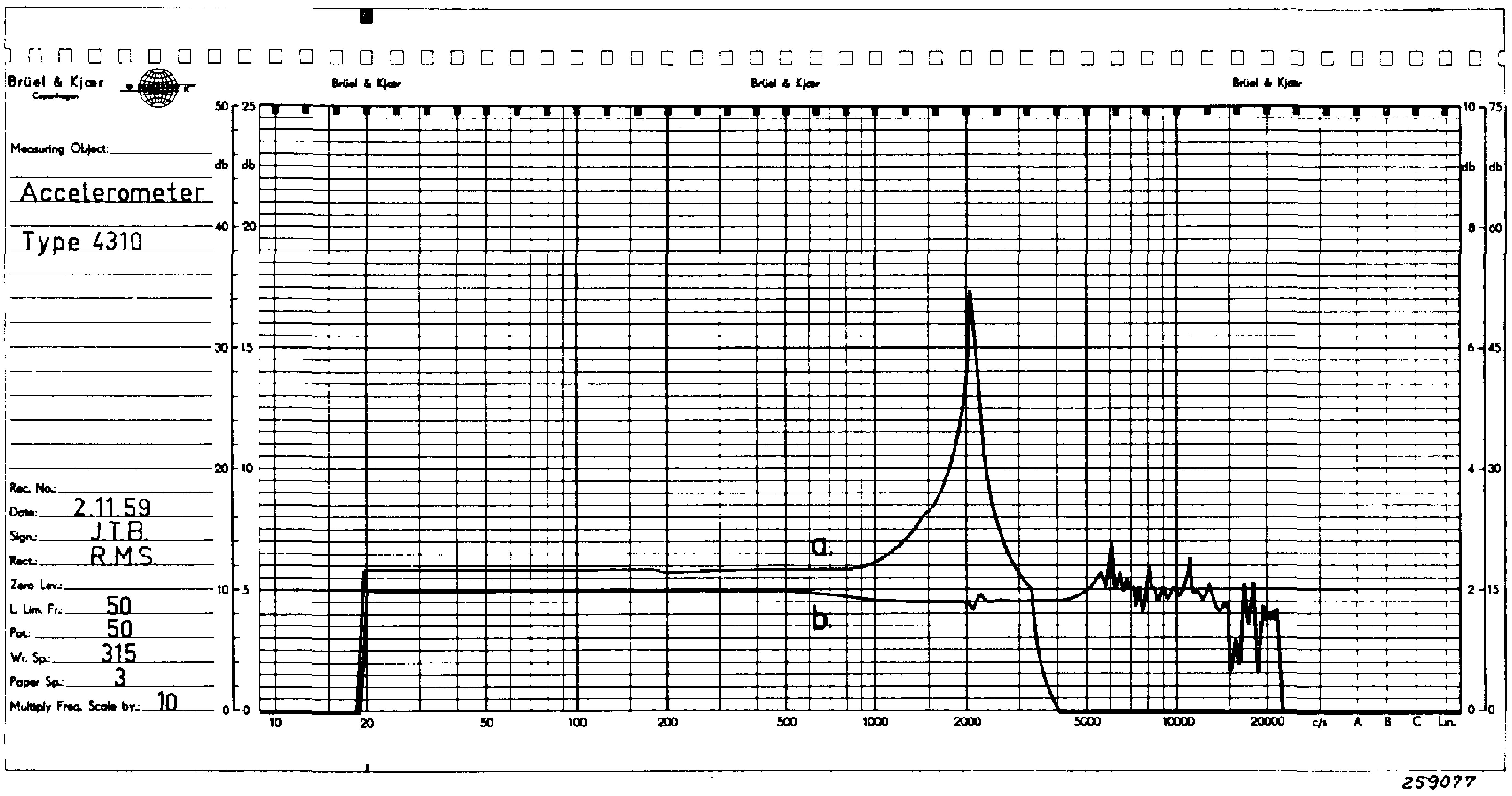

Fig. 16. Data recorded automatically by means of the set-up shown in Fig. 15.
(a) Frequency response of test accelerometer (B & K Type 4310).
(b) Acceleration level of the shaker table. Note the notch-peak characteristic around 20,000 c/s caused by the Specimen (accelerometer) resonance, which is well compensated for by means of the servocontrol arrangement.

a rigid fixture, Fig. 18b, the "bending mode" of the table can be demonstrated. When mounted directly on the table, the sensitivity of the accelerometer will seem a little higher than when mounted on the fixture. In Fig. 19 the frequency characteristics of the accelerometer are shown for both cases, the acceleration level of the table being kept constant during the measurements.

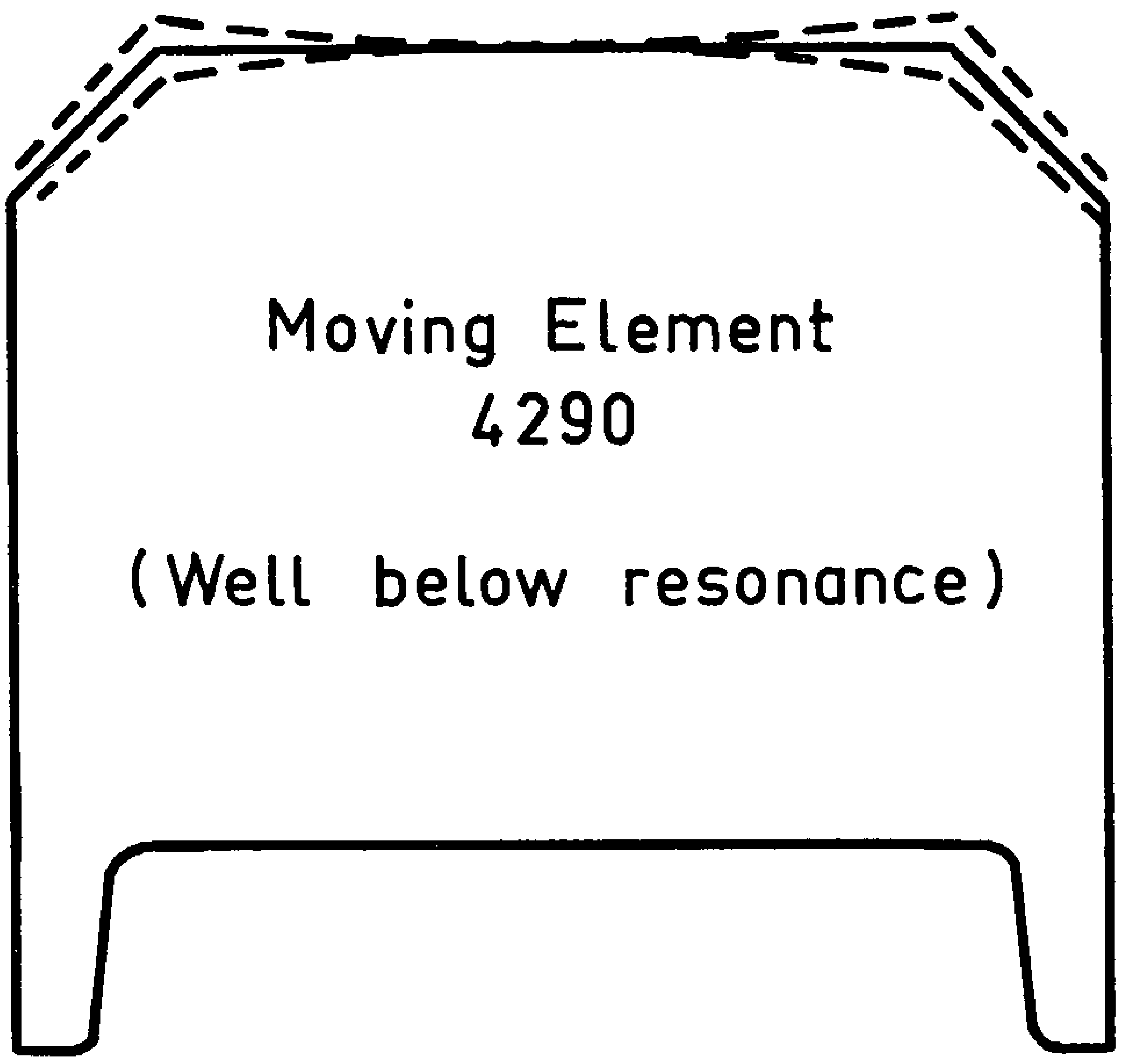

Fig. 17. Sketch showing the "deformation" of the Type 4290 moving element well below the first basic resonance. (Highly exaggerated deformations).

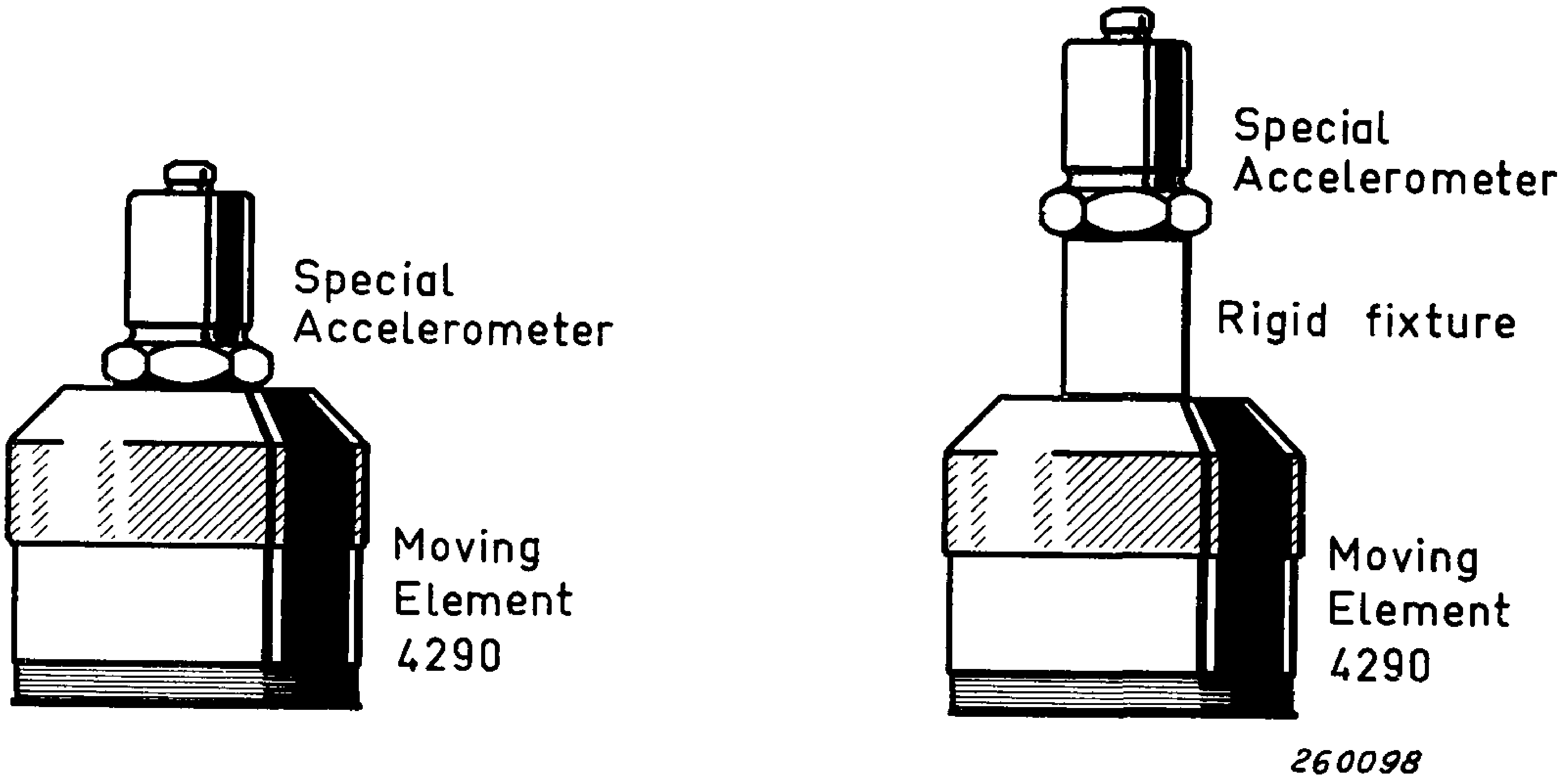

Fig. 18. Mounting of a specially designed thin-based accelerometer for demonstration of moving element "deformation".
(a) Accelerometer mounted directly on the shaker table.
(b) Accelerometer mounted on a rigid fixture.

The base area of the accelerometer used for the demonstration was 1.16 cm^2, and the difference in sensitivity amounted to around 0.5 db (see curves). The apparent increase in sensitivity when the accelerometer is mounted directly on the table is caused by the bending of its pressure sensitive transducing element, see Fig. 20. This should be borne in mind when thin

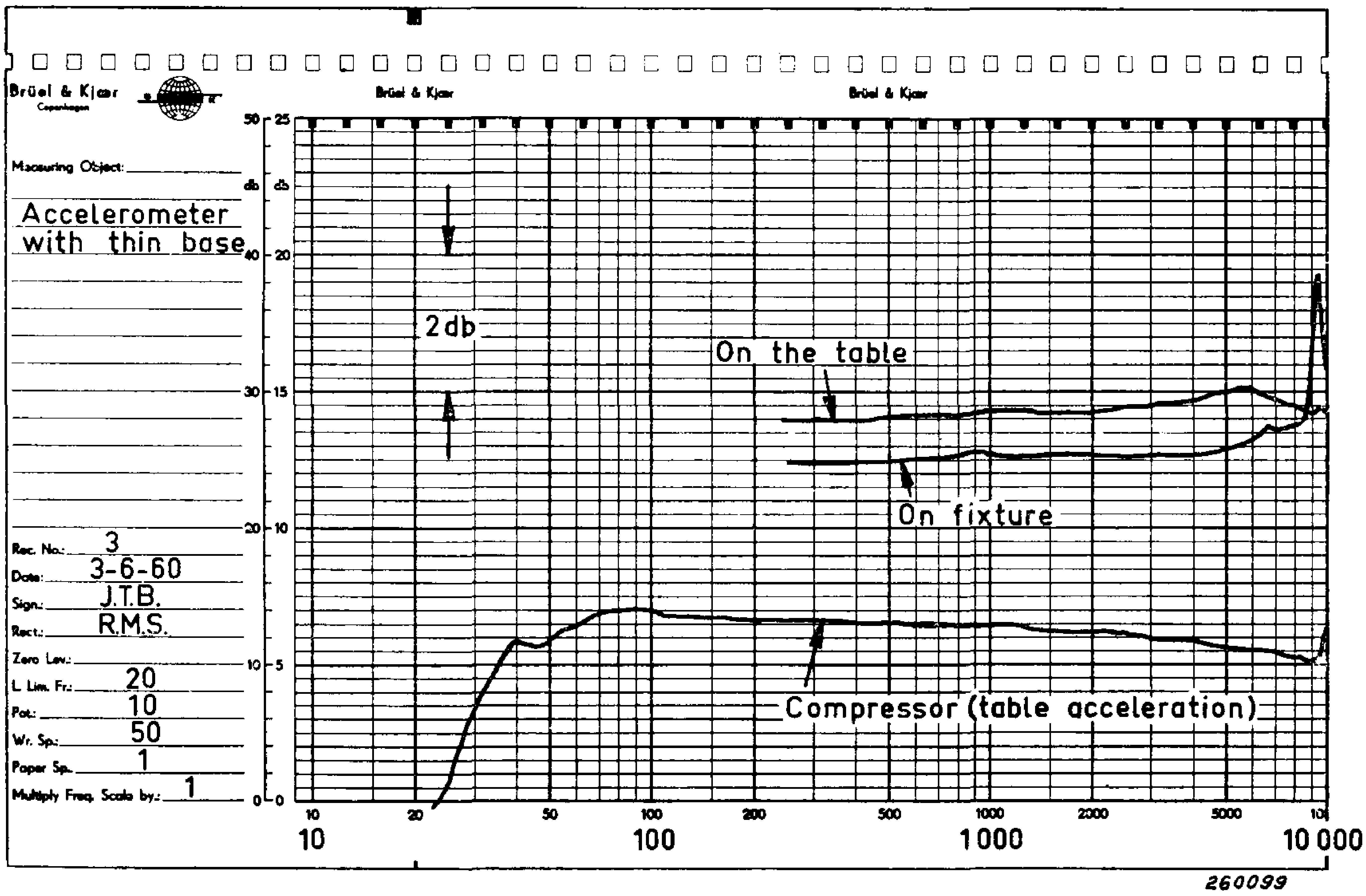

Fig. 19. Frequency characteristics obtained from measurements on the thin based accelerometer when mounted according to Fig. 18.

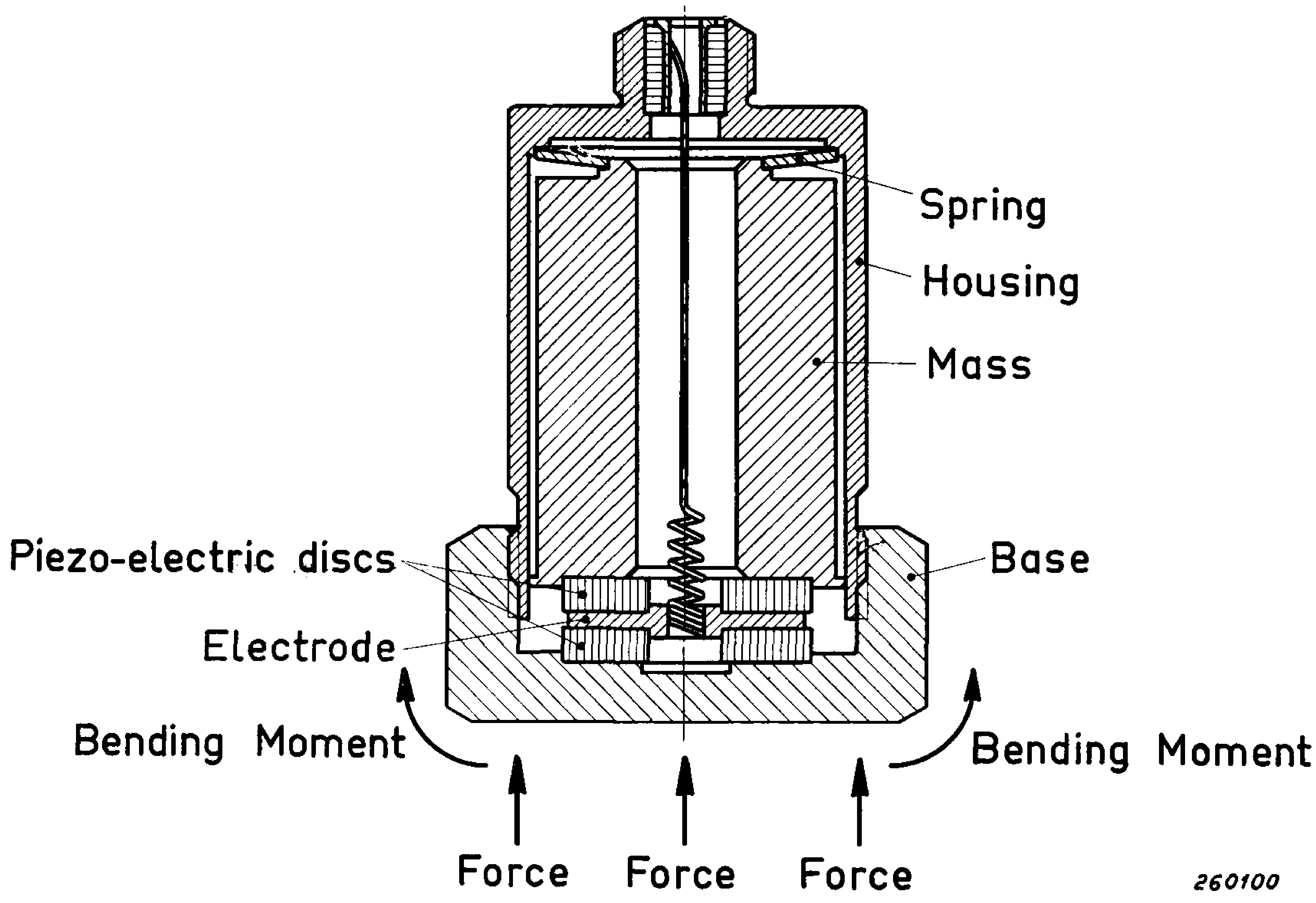

Fig. 20. The basic construction of a piezo-electric accelerometer showing how the bending moments caused by "deformation" of the base, influence the accelerometer sensitivity.

based vibration pick-ups are tested for comparison with other units, measured with the same set-up.

It should be mentioned that the requirements for the pure translatory motion

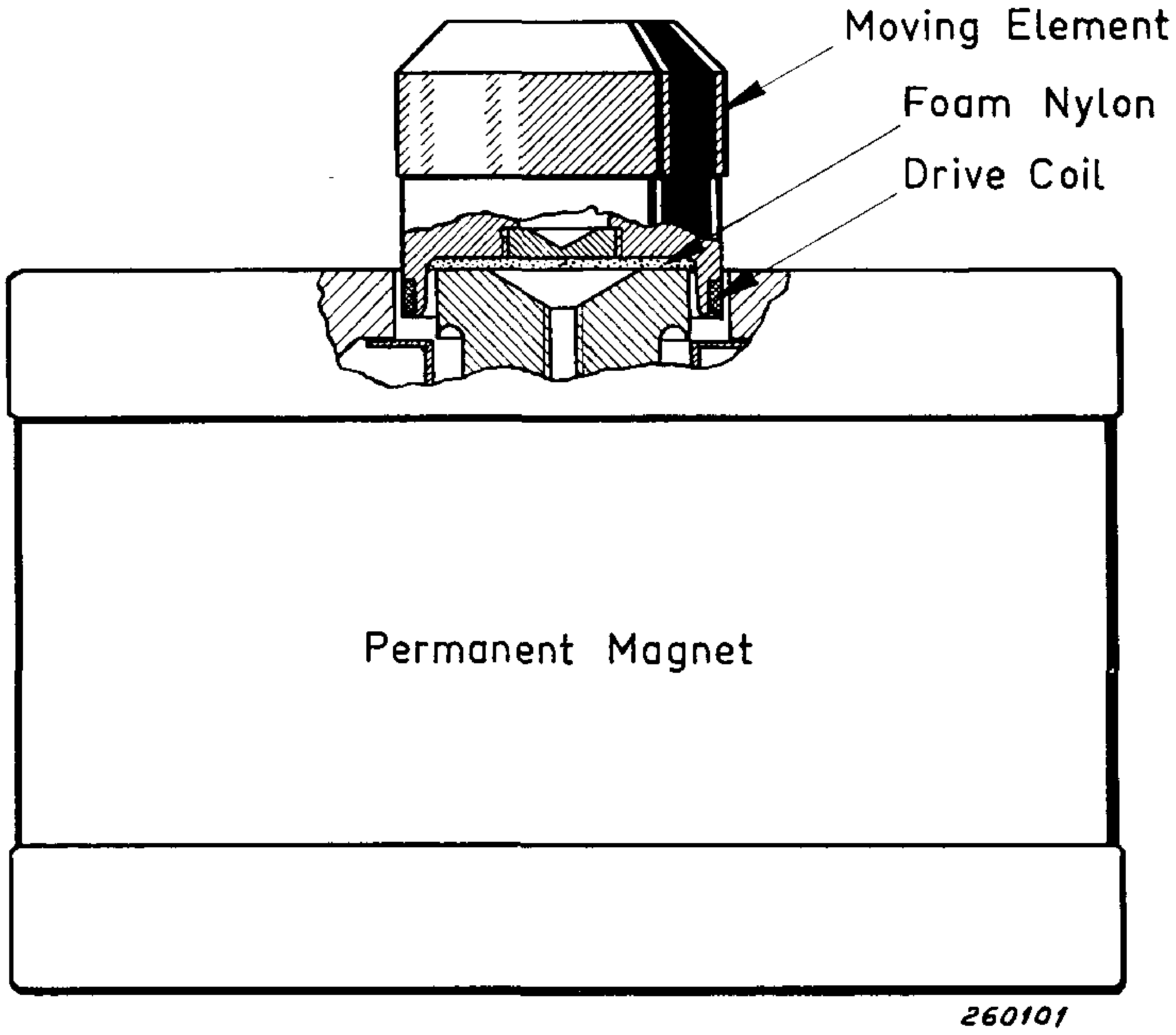

Fig. 21. Sketch showing the suspension of the Calibration Exciter moving element.

of a calibration exciter are not *very* strict as the transverse sensitivity of the pick-ups is normally low. It has therefore been possible in the design of Type 4290 to use floating suspension with no table restraint, see Fig. 21, and the center of gravity of the moving element is carefully located on the axis of the unit. Finally, to avoid spurious motion of the shaker an additional requirement is, that the test specimen should be centered on the table and its mass be smaller than that of the moving element, the weight of the moving element being approximately 200 grammes.

Acknowledgement.

Thanks are due to Mr. Galt B. Booth, Technical Director, MB Electronics, New Haven, Connecticut, for suggestions and critisism in the presentation of this article.

Selected References:

1. Jens T. Broch: "Vibration Testing of Components", B & K Technical Review No. 2-1958.
2. Galt B. Booth: "Random Vibration Test Techniques", 1959, Proceedings of the National Meeting of the Institution of Environmental Engineers.
3. Karl Unholz: "Table Motion Problems in Electrodynamic Vibration Exciters", MB Vibration Notebook, Volume 1, No. 3-1955. Published by MB Electronics, New Haven 8, Connecticut, U.S.A.
4. Charles E. Maki: "Frequency Response Characteristics of Random Noise Systems", Abstract in J.A.S.A., Volume 30, No. 7-1958, p. 691.
5. D. E. Priest: "Technical Characteristics of Simulation Equipment", Random Vibration 1958, The Technology Press of the M.I.T., Cambridge 39, Massachusetts, U.S.A.
6. K. J. Metzgar: "The Basis for the Design of Simulation Equipment", Random Vibration 1958, The Technology Press of the M.I.T., Cambridge 39, Massachusetts, U.S.A.

News from the Factory.

New Band Pass Filter Set Type 1611.
The Band Pass Filter Set Type 1611 contains the same 30 one-third octave filters and weighting networks as the Spectrometer Type 2111, but the filters are built in a special wooden case. When used together with the Microphone Amplifier Type 2603 or 2604, or the Frequency Analyzer Type 2107, this combination is equivalent to a complete spectrometer, having a greater flexibility at the expense of larger volume and greater weight.

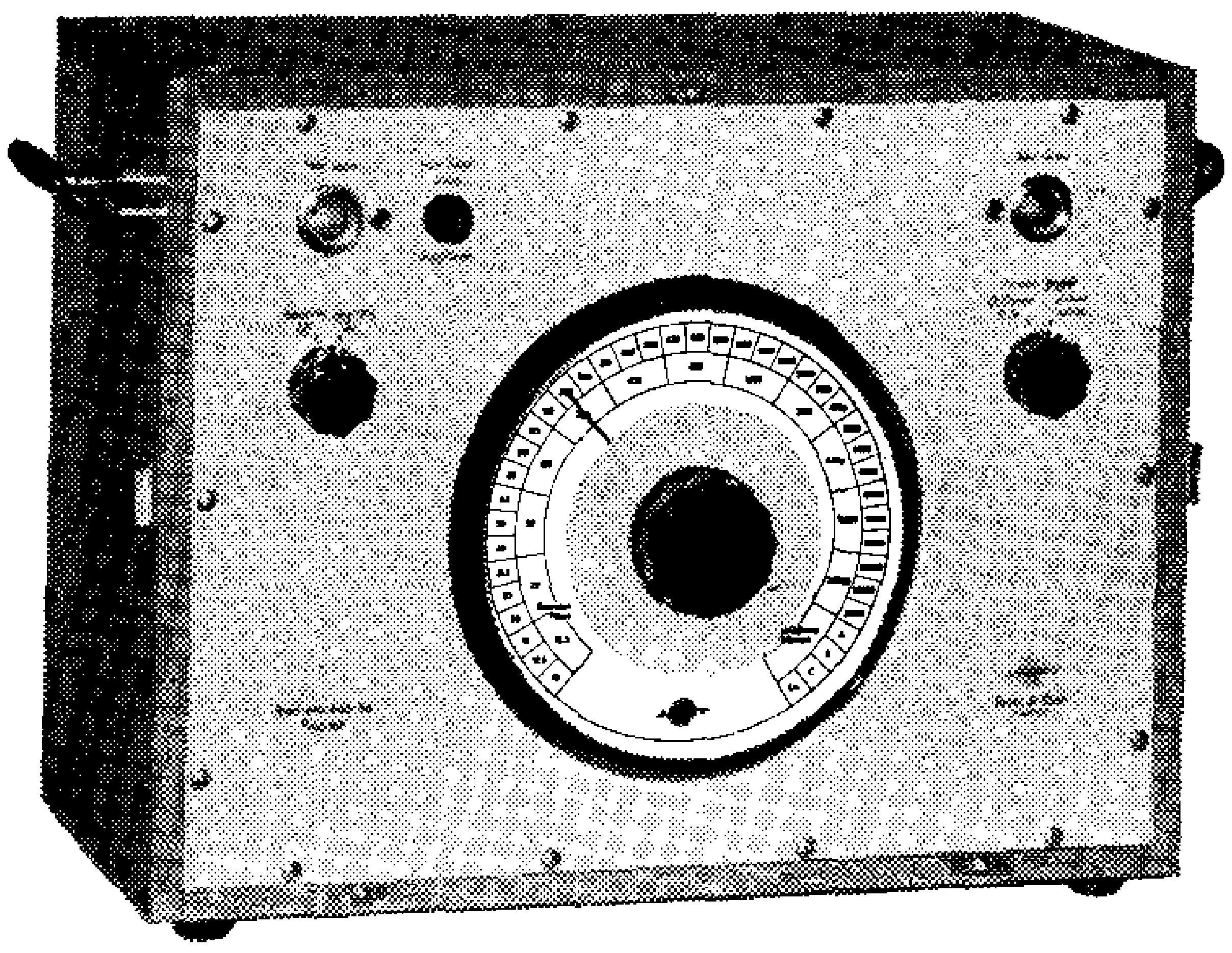
The Band-Pass Filter Set Type 1611.

New High Speed Level Recorder Type 2305.
The Level Recorder Type 2305 has been developed on the basis of the well-known Recorder Type 2304, which has now been in production for more than 10 years The major improvements are:

1. Type 2305 contains 3 full-wave rectifier circuits enabling true RMS, average, and peak detection of the input signal to be obtained (2304 gives half wave peak rectification).
2. Two writing widths, viz. 50 mm and 100 mm, (Type 2304, 50 mm only).
3. Improved frequency characteristics for low frequencies, 3 db point around 8 c/s (2304, 3 db point around 20 c/s).
4. Improved resolving power. The range potentiometers now contain 216 lamellae (2304 potentiometers, 108 lamellae).
5. 15 writing speeds available for both ch~~art~~ widths ranging from 2 mm/sec. to 2000 mm/sec. (2304, 9 writing speeds from 50 mm/sec. to 1000 mm/sec.).
6. Direct polar diagram recording.
7. Direct D. C. recording.

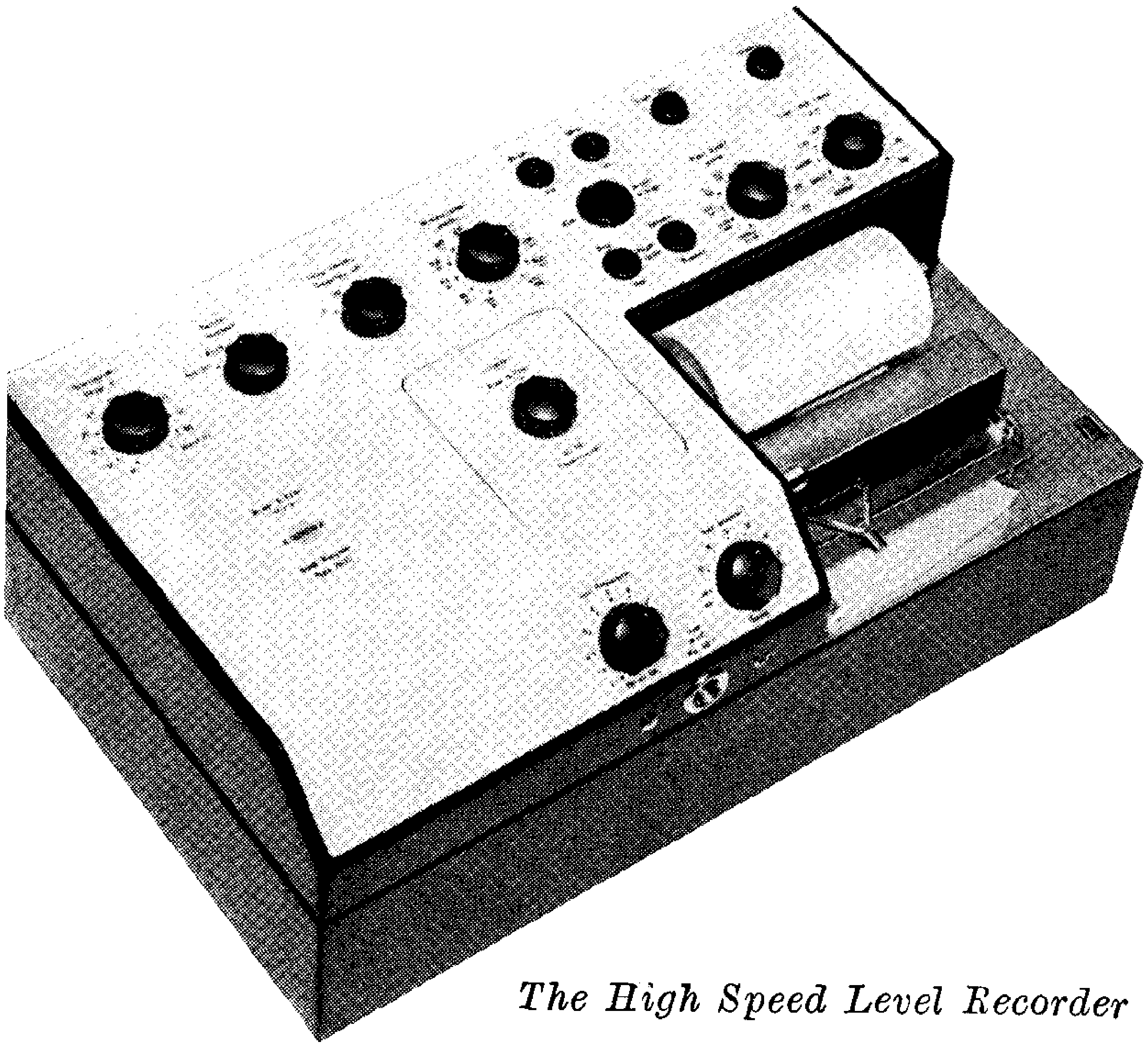
The High Speed Level Recorder Type 2305.

A number of other features have been included, mechanical as well as electrical, some of which are described below:
The mechanical connection to other B & K instruments, in which case the motor of the Recorder is used to drive the tuning mechanism of the connected oscillator or analyzer, enables synchronized speeds of the precalibrated recording paper and the tuning mechanism to be obtained automatically. A friction type clutch, also enables the paper to be shifted backwards and forwards after engagement, whereby completely synchronous start of paper and tuning mechanism with respect to their calibration is possible. To facilitate the use of the Recorder in production control systems, a pressbutton marked "Single Chart" is provided. By pressing the button only one complete chart is recorded, after which the drive motor is released.
If it is desired to record more curves on the same chart, the motor can be reversed by means of a toggle switch and the "Single Chart" button pressed once more. The original chart is then returned to its starting point without loss of synchronization, and a new curve can be recorded.

A mechanical arrangement enables the pen to be lifted from the paper whenever desired. The Recorder is furthermore supplied with a separate eventmarker, marking the outer part of the paper with a "dip" when the button marked "Marking" is pressed.
Both the pen lifting device and the eventmarker as well as the paper-drive-motor clutch, can be remote controlled.
A switch for controling the electromechanical drive of the tuning mechanism in the Spectrometer Type 2111 is built into the Recorder, and a further built-in switch enables the successive switching of two different inputs into a single output.

Three models of the Recorder are available:
Type 2305A which is delivered in steel cabinet.
Type 2305B in mahogany cabinet with handles and lid.
Type 2305C in steel cabinet with gears for mounting in 19″ rack.

Combined Units.
The Level Recorder may also be delivered in rack mounting combined with an Oscillator or a Spectrometer or a Frequency Analyzer. The type numbers of the combined units are given in the following:

Type 3303 Automatic Frequency Response Recorder

is a combination of the Level Recorder and the Beat Frequency Oscillator Type 1013. Frequency range 200 c/s—200 kc/s. The units are mechanically coupled together for synchroneous operation.

Type 3304 Automatic Frequency Response Recorder

is a similar combination of the Level Recorder and the Beat Frequency Oscilator Type 1014 (frequency range 20 c/s—20 kc/s.

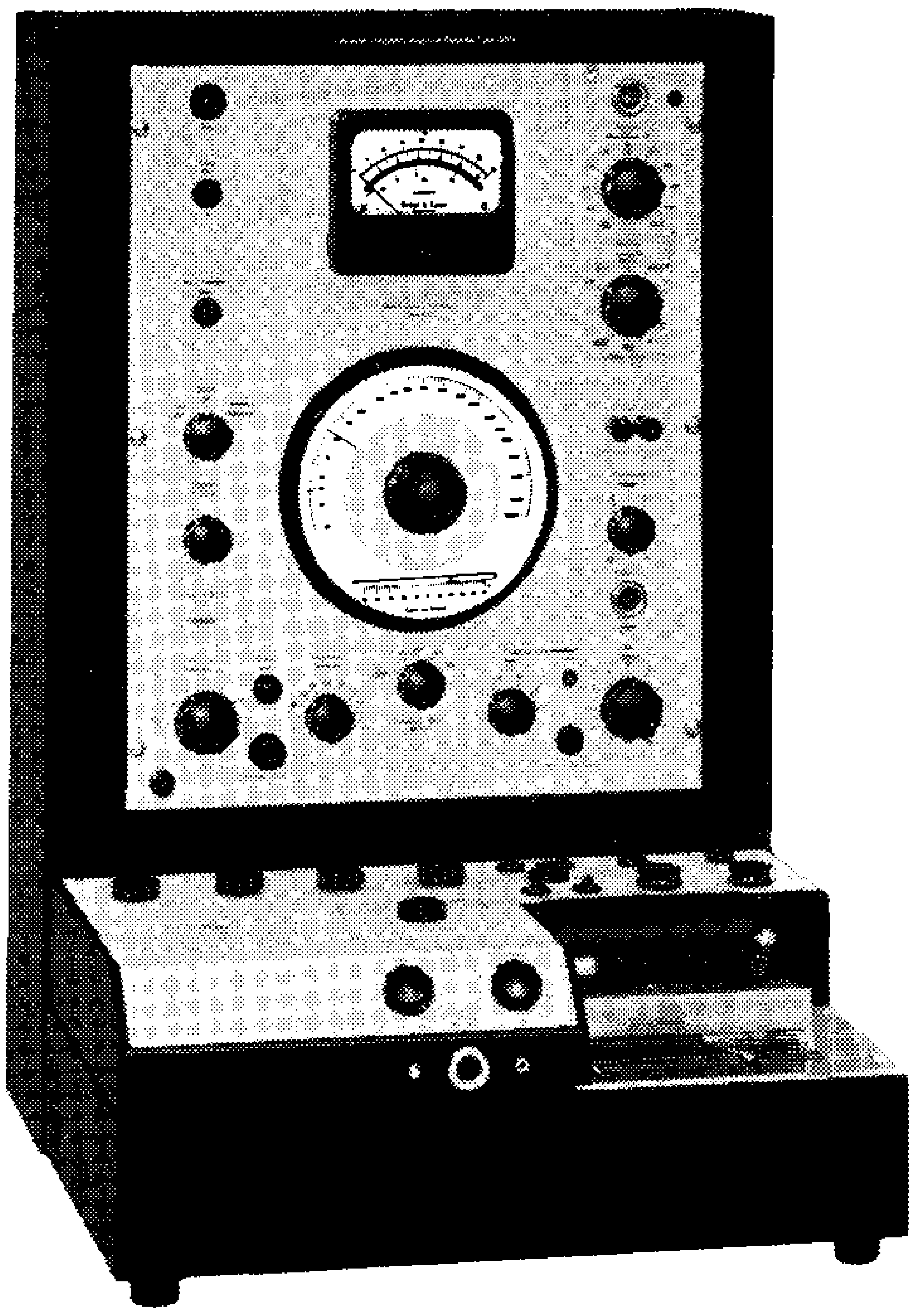

The Automatic Frequency Response Recorder Type 3303 (Type 3304).

Type 3312 Audio Freqency Spectrum Recorder

is a combination of the Level Recorder and the Audio Frequency Spectrometer Type 2111. The units are coupled together for synchronous operation. Allows $^1/_3$ octave and $^1/_1$ octave spectograms of complex signals to be recorded automatically on precalibrated paper.

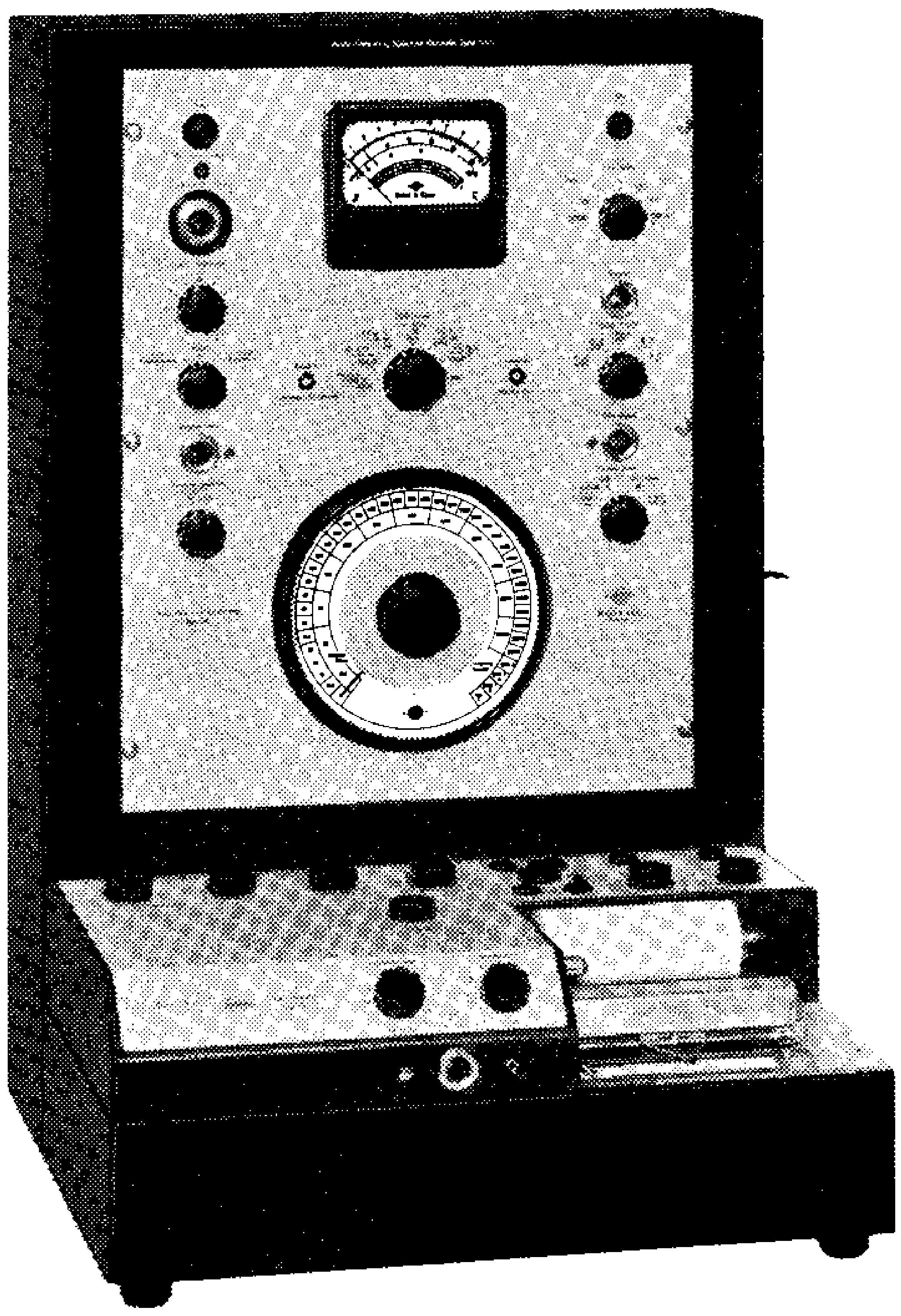

The Audio Frequency Spectrum Recorder Type 3312.

Type 3323 A. F. Response and Spectrum Recorder

is a combination of the Level Recorder, the BFO Type 1014, and the Audio Frequency Spectrometer Type 2111. All three units are coupled together for synchronous operation.

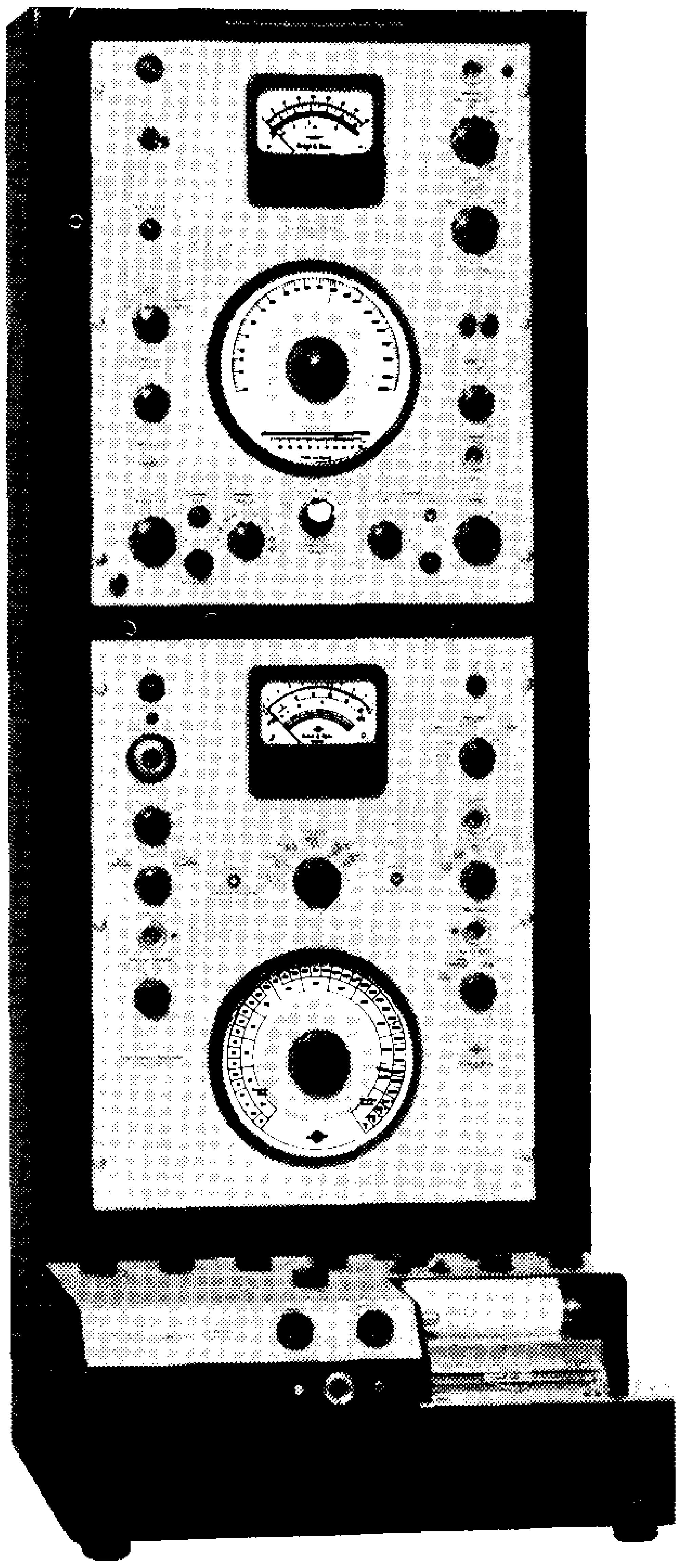

The A. F. Response and Spectrum Recorder Type 3323.

Type 3330 Narrow Band Spectrum Recorder

is a combination of the Level Recorder and the Frequency Analyzer Type 2107. Allows automatic recording of narrow-band frequency analysis of complex signals. Physical dimensions similar to Type 3303.

Modification of the Wide Range Voltmeter Type 2405.

The Wide Range Voltmeter Type 2405 has been supplied with a new input probe and capacitive attenuator, the dimensions of which are:

	Total Length	Maximum Width (ϕ)
Input Probe	90 mm	19,5 mm
60 db Attenu	130 mm	16 mm

The input impedance of the probe, which contains a cathode follower stage for impedance transformation, is approximately 5 MΩ at 20 c/s and 0.15 MΩ paralleled by 5 $\mu\mu$F at 10 Mc/s.
A cable of 1 m length connects the probe to the Voltmeter by means of a seven-poled plug.

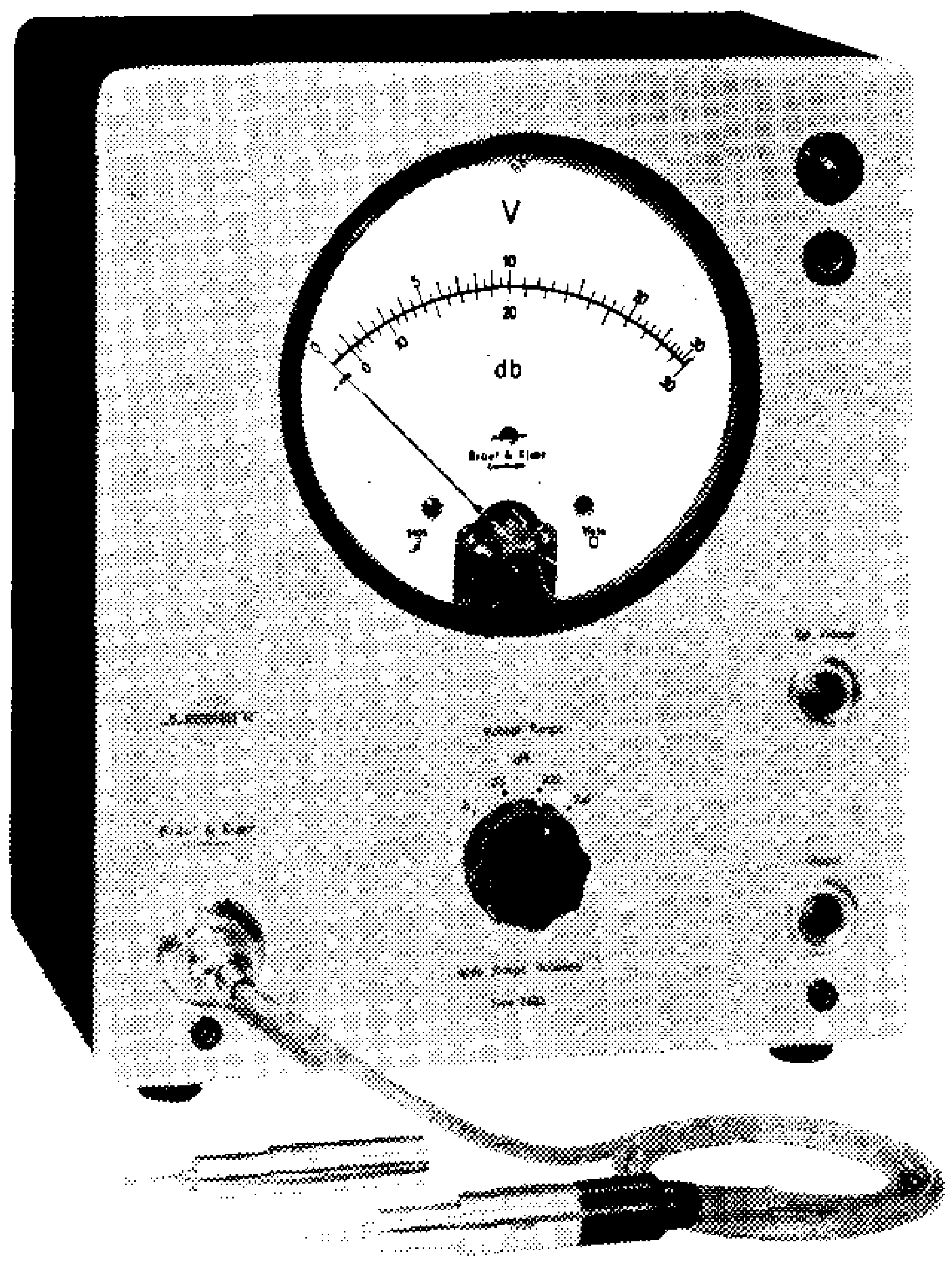

The Wide Range Voltmeter Type 2405 with the new Input Probe and Capacitive Attenuator.

New V.H.F. Converter Type 2004.

The V.H.F. Converter Type 2004 has been developed as an extension instrument to the Heterodyne Voltmeter Type 2005. It extends the frequency range for selective measurements upwards, making the combination 2004 + 2005 cover the frequencies from 20 kc/s to 230 Mc/s. Typical fields of applications are measurements on Television, V. H. F., F. M., Radar, and other projects. The voltage ranges are 15—150—1500 μV, and 15 and 150 mV full scale deflection. By using the capacitive attenuator which is supplied with the instrument, the voltage ranges can be extended to 1.5 and 15 volts. Input impedance is approximately 50 kΩ paralleled by 5.5 $\mu\mu$F.

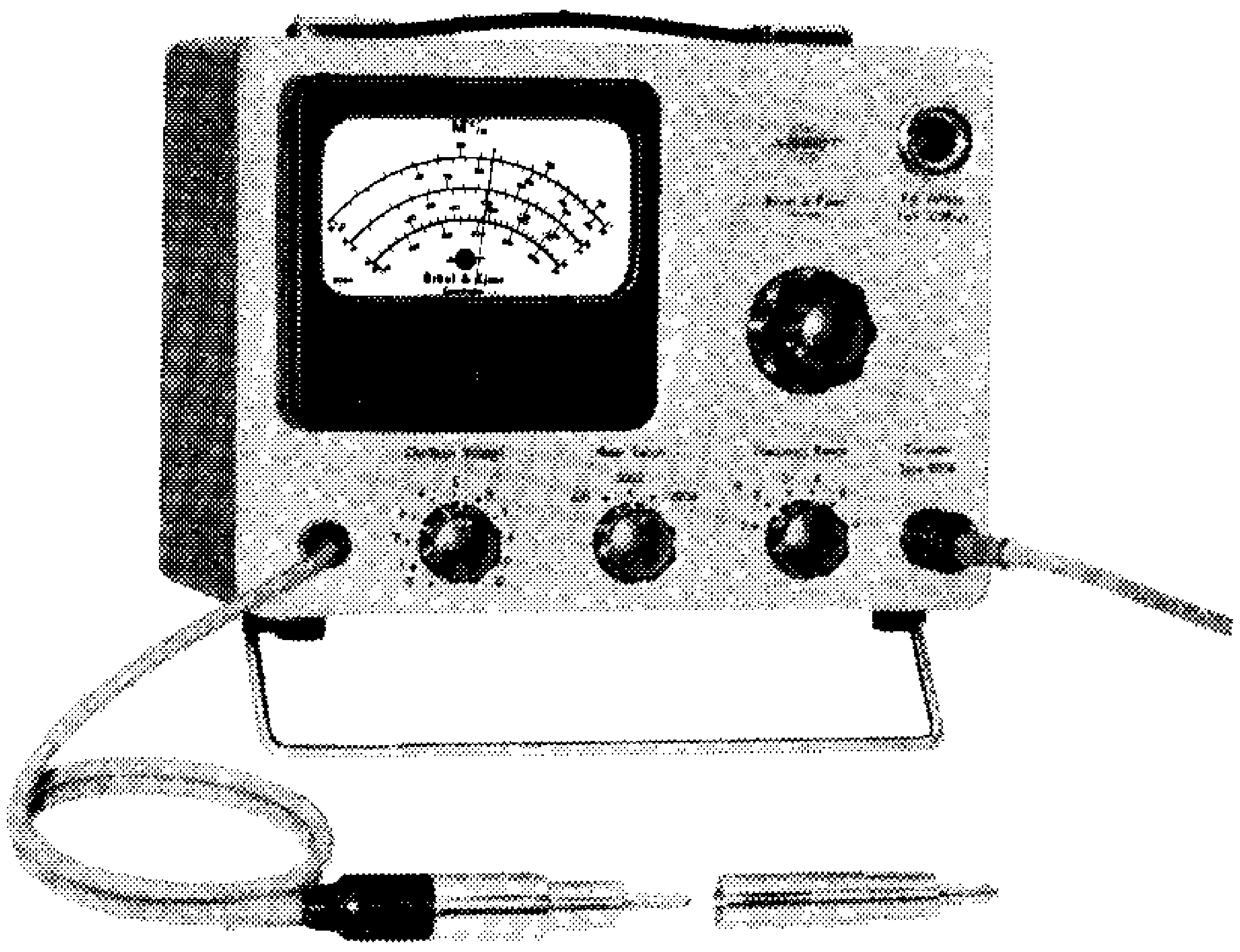

The V. H. F. Converter Type 2004.

Complex Modulus Apparatus Type 3930 and Complex Modulus Recorder Type. 3324.

The Complex Modulus Apparatus and Recorder are developed for the determination of the complex modulus of elasticity and loss factor of plastics and other material. The instrumentation consists mainly of a test jig, Type 3930, in which a sample of the material should be mounted, and the associated electronic measuring equipment which is conveniently built together in a metal rack (Type 3324).

It conforms with the equipment necessary to carry out measurements according to the method developed by Dr. H. Oberst and his associates. The test jig itself is made of noncorrosive metal and contains two electromagnetic transducers. It is designed for use over a very great temperature range, from extremely low temperatures up to about 250° C (480° F), and it is thus possible to measure the properties of the material, at any temperature of interest. This is of special importance with regard to high polymere plastic materials, the damping properties of which are greatly dependent upon temperature.

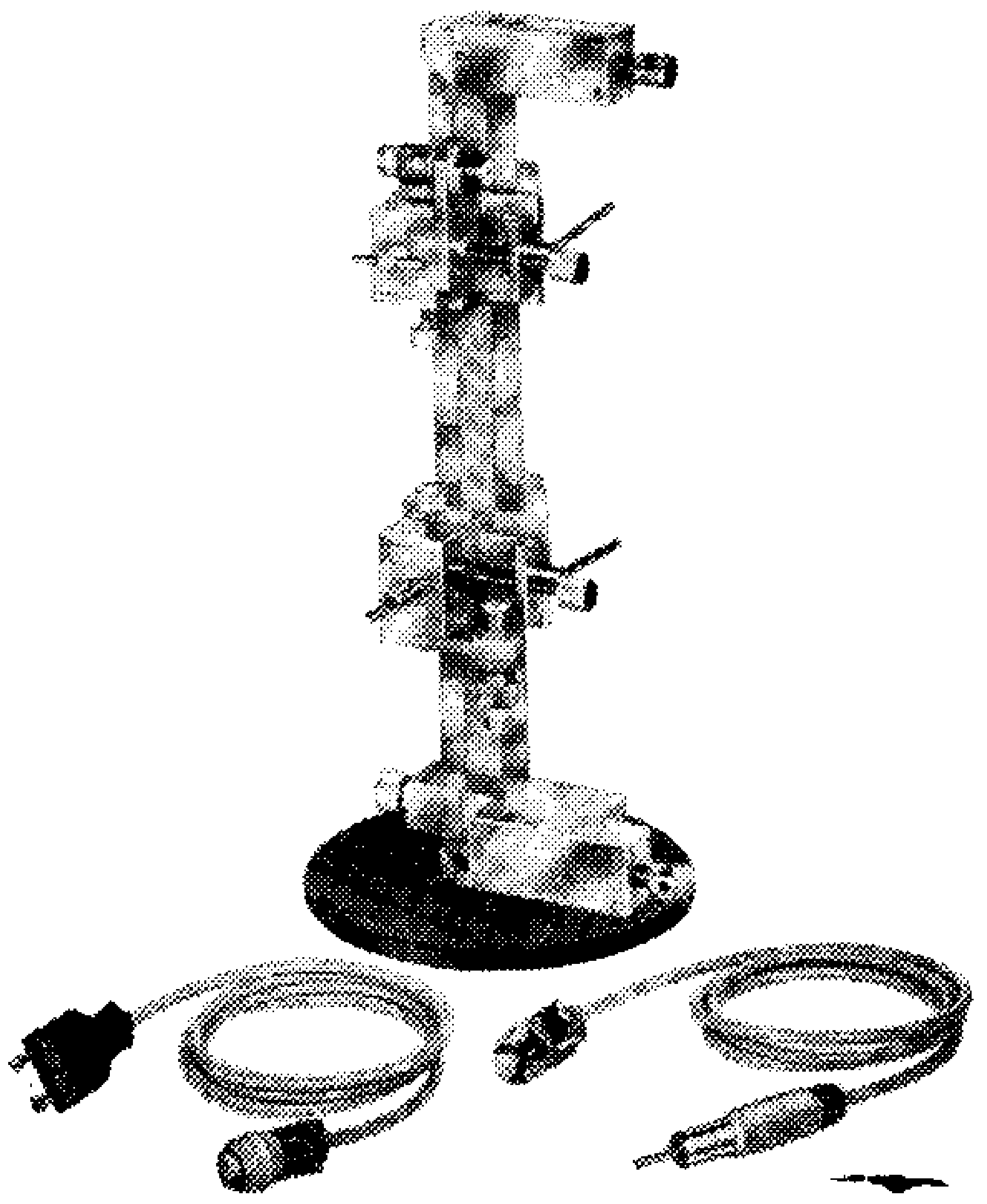

The Complex Modulus Apparatus Type 3930.

The electronic equipment contains an oscillator, an amplifier and a level recorder which enables the vibration response of the test material to be recorded automatically as a function of frequency in the range 20 c/s to 20.000 c/s. From the curves the damping properties can be readily found.

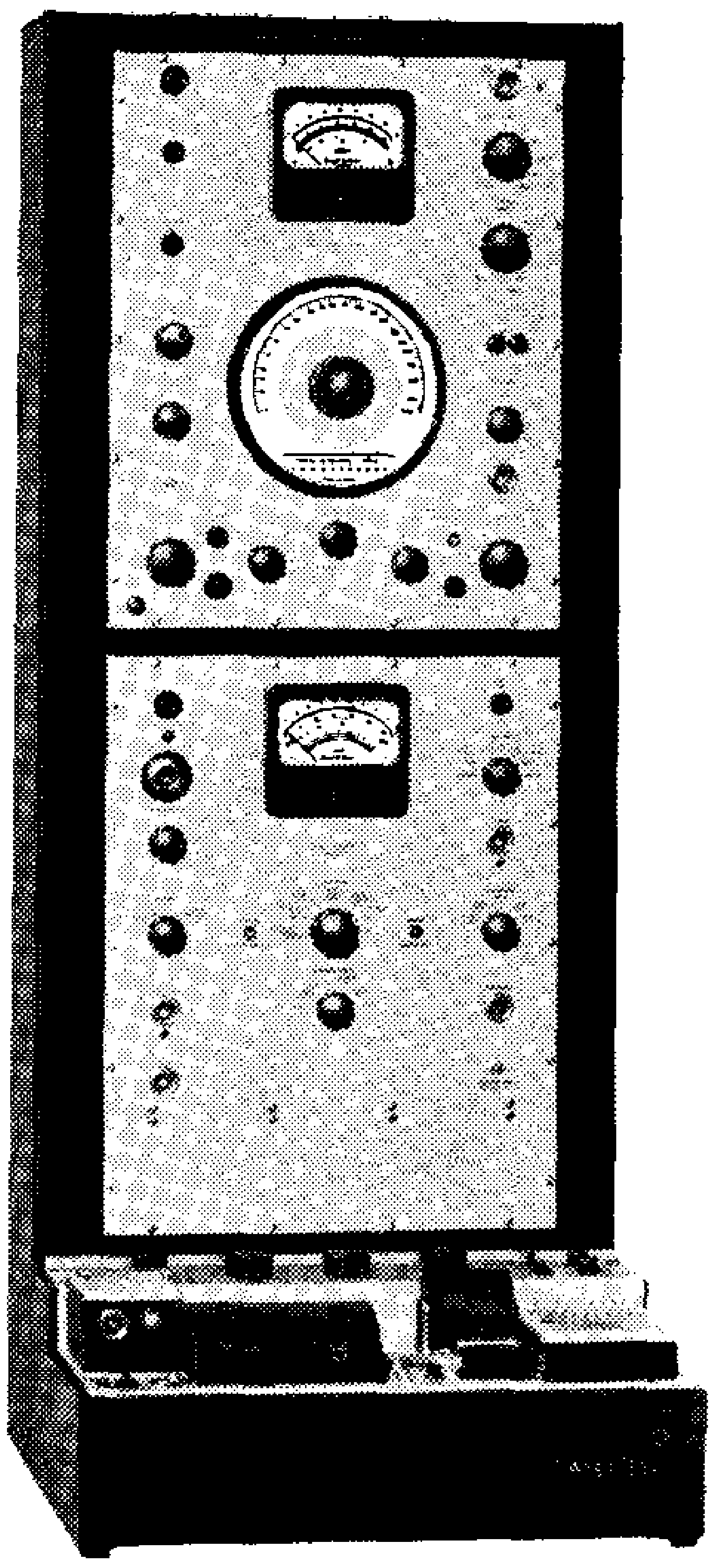

The Complex Modulus Recorder Type 3324.

Input Transformer TI 0001.

This Transformer has been designed to allow measurements on symmetrical networks such as telephone circuits and balanced amplifiers by means of the B & K Frequency Analyzer Type 2105—2107 and 2111, or the Voltmeters 2407—2409—2603 and 2604, as well as the Level Recorder Type 2305. The accuracy of the Transformer is ± 0.2 db in the frequency range 10 c/s to 20 kc/s, and the input can be switched to have an impedance of either 600 Ω or 20 kΩ. The maximum input voltage (1% distortion) is 0.8 volts per c/s, maximum 20 volts when switched for 600 Ω input impedance (100 volts for 20 kΩ input impedance). Transformer ratio 1:1.

The Input Transformer TI 0001.

Output Transformer TU 0005.

The Transformer TU 0005 is designed to allow symmetrical output from the attenuator output of the Beat Frequency Oscillator Type 1014. (Symmetry better than 0.1%). The output impedance is 600 Ω and the distortion 0.5% at 20 c/s with maximum output voltage from the B. F. O. (12.5 volts). The accuracy of the Transformer is ± 0.2 db in the frequency range 10 c/s to 35 kc/s.

The Output Transformer TU 0005.

Furthermore, a core material has been chosen for the transformer which makes it possible to "preload" the secondary winding with a current of 100 mA without causing additional distortion for frequencies above 300 c/s. Transformer ratio $\sqrt{10}:1$.

Roughness Meter Type 6102.

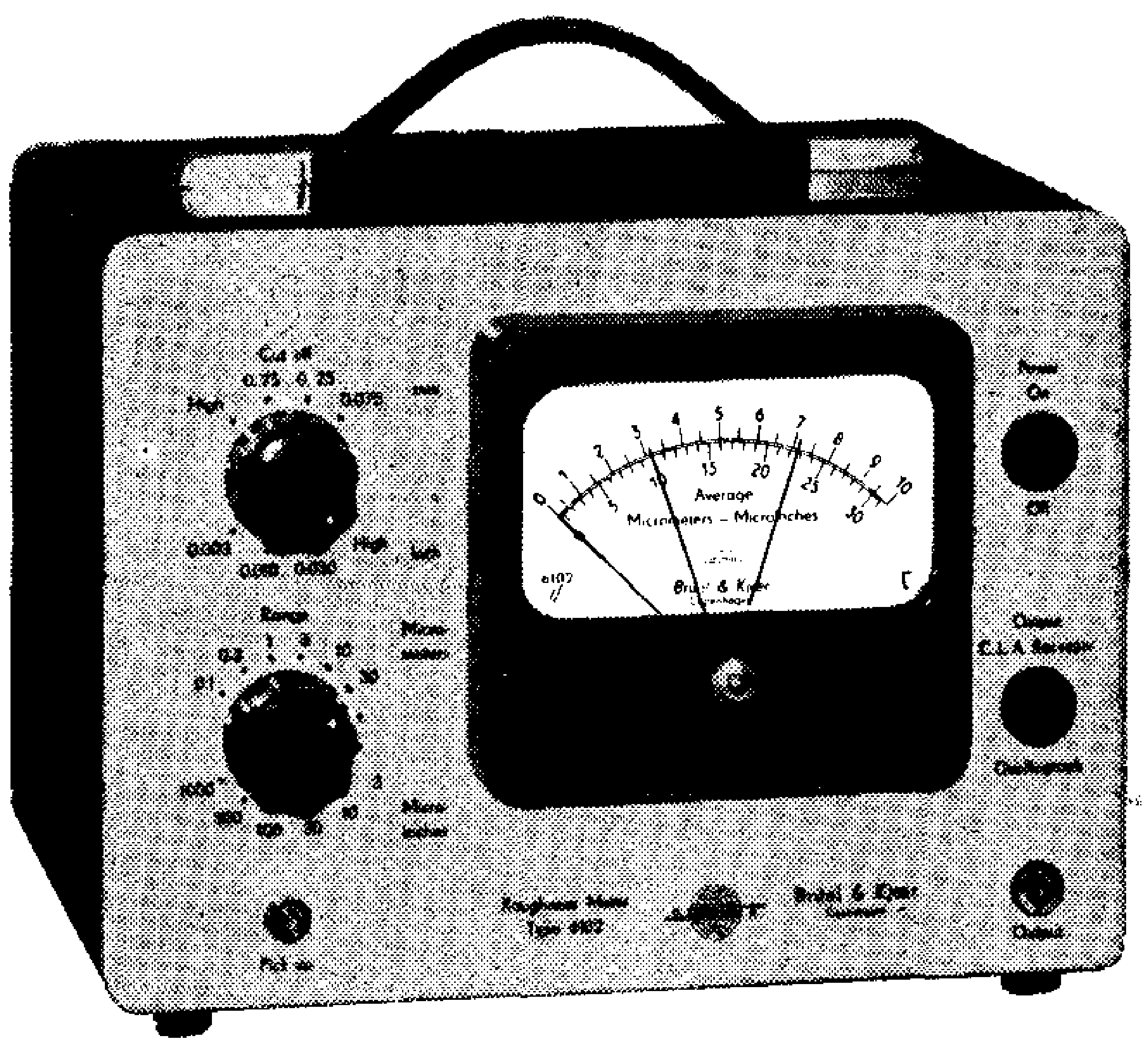

Roughness Meter Type 6102.

The Roughness Meter Type 6100 has been superseded by the new Roughness Meter Type 6102. The stylus type pick-up is unchanged, but the electronic part of the Roughness Meter has been extensively modified, now featuring cathode follower input and output, a separate output rectifier, a large stabilizing feedback, a resistance range attenuator etc. The performance is therefore greatly improved without reducing the convenience of operation. The instrument is provided with three standardized roughness-width cut-offs of 0.75, 0.25, and 0.075 mm (.03, .01, .003 inch) plus a "high" cut-off position which enables recording or observation of surface profiles to be made with a minimum of distortion. The precision resistance attenuator gives six sensitivity ranges calibrated in μmeter (full-scale deflection for CLA roughness: 0.1, 0.3, 1, 3, 10, 30 μ) and six sensitivity ranges calibrated in μinches (full-scale deflection for CLA roughness: 3, 10, 30, 100, 300, 1000 μ''). Two different outputs are included: A direct low impedance A.C. output for monitoring with an oscilloscope or oscillograph, and a "CLA Recorder" output, fed by a separate bridge rectifier which allows the indications of the meter to be recorded for production roughness control.

The Reference Specimens MA 0014 are supplied with the instrument, making it easy to calibrate in conjunction with the different B & K roughness Pick-ups. Motor driven operation of the Pick-ups can be carried out by means of the Motor Drive Type 3910. The necessary power supply for the Motor Drive is available from a socket at the rear plate of the Roughness Meter 6102.

Small Bore Pick-up MP 0002.

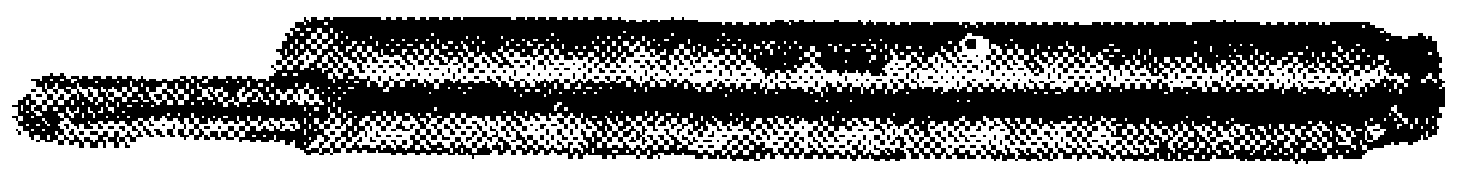

Small Bore Pick-up MP 0002.

The Small Bore Pick-up MP 0002 is designed to be used in connection with the Roughness Meter when surface roughness measurements are to be taken inside small bores with diameters down to 3 mm (0.118 inch). The operating specifications are the same as those for the standard Pick-up MP 6100, normally supplied with the Roughness Meter. However, the skid radius has been reduced to 6 mm (0.24 inch), and the first mechanical resonance occurs at 2200 c/s. The Small Bore Pick-up, which can also be utilised for the roughness measurement of flat and convex surfaces, should be driven by the Motor Drive Type 3910.

Precision Sound Level Meter Type 2203.

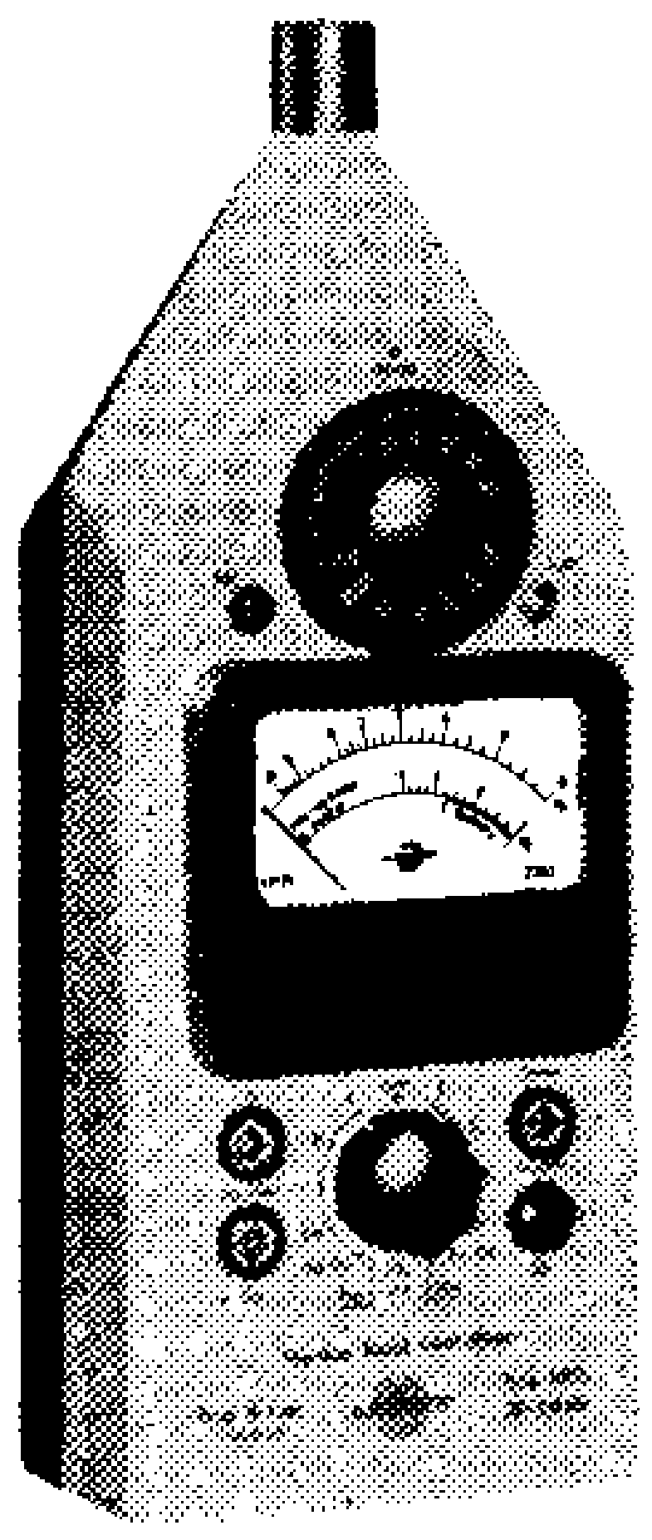

Precision Sound Level Meter Type 2203.

The compact, battery-operated Type 2203 Sound Level Meter, is a high-precision portable instrument, which has been designed to completely fulfill the proposed international IEC standards for Precision Sound Level Meters.*) It is mainly intended for the quick and accurate measurement of noise from traffic, and within factories and buildings as the instrument gives a direct scale reading in db sound level. The measuring range is 22 db to 134 db, and it is accurate within ± 1 db.

The instrument can be connected to external $^1/_1$ or $^1/_3$ octave filters, converting it into a Frequency Analyzer, and by connecting the output to a Level Recorder an automatically paper-recorded reading can be produced.

A linear frequency range of 20 c/s to 20,000 c/s is also included, which facilitates the use of the instrument, not only as a sound level meter, but as a battery-operated preamplifier for voltage and vibration measurements.

The Sound Level Meter is transistorized for low power consumption and is equipped with a precision Condenser Microphone (B & K Type 4131).

---

*) Rapallo 1960.

Brüel & Kjær

ADR.: BRÜEL & KJÆR
NÆRUM - DENMARK

TELEPHONE: 800500
BRUKJA, Copenhagen

TELEX 5316

Printed in Copenhagen, Denmark